FLOWave SAW flowmeter

- No obstacles inside the measuring tube, compact, lightweight and low energy consumption
- Conforms to hygienic requirements, CIP/SIP compatible
- Ideal for liquids with low or no conductivity
- Digital communication, parameterisation via Communicator, display
- Optional: ATEX/IECEx certification, II 3G/D

Product variants described in the data sheet may differ from the product presentation and description.

Can be combined with

Type 8802
ELEMENT continuous control valve systems - overview

Type 8619
multiCELL - Multi-channel and multi-function transmitter/controller

Type 8647
AirLINE SP – electropneumatic automation system

Type ME43
Fieldbus gateway

Type description

The Type 8098 flowmeter is part of the FLOWave product range. It is based on SAW (Surface Acoustic Waves) technology and is mainly designed for applications with the highest hygienic demands. This is achieved by using suitable stainless steel materials, a measuring tube completely free of any internal parts and an ideal outer hygienic design.

FLOWave offers a range of integrated functions including the advantages of flexibility, ease of cleaning, compact dimensions, lightweight, easy installation and handling, and is compliant with numerous standards.

Optimal measurement results can be achieved with homogeneous liquids, free of air and solid particles. For liquids with high viscosity, an integrated viscosity compensation can be activated. Gas and steam cannot be measured; however, their flow does not have any negative effect on the device or its operation and other liquids flowing through afterwards are measured correctly as before.

Beside volume flow, a density measurement optional feature is available. With this option, the mass flow is calculated based on volume flow and density measurements.

Special functions derived from further process values (differentiation factor (DF), acoustic transmission factor and concentration) offer additional information about the particular liquid in use (for details, see chapter **“7.2. Special functions” on page 31**).

DTS 1000270652 EN Version: Y Status: RL (released | freigegeben | validé) printed: 12.04.2024

Visit product website

Table of contents

1. General technical data

1.1. About the device

The flowmeter Type 8098 consists of:

- either a flow sensor Type S097 and a FLOWave L transmitter (variant FLOWave L flowmeter), which is available with or without industrial communication (the FLOWave L variant with industrial communication, recognisable by the two M12 female connectors and the M12 male connector, is called the Ethernet variant.)

- or a flow sensor Type S097 and a FLOWave S transmitter (variant FLOWave S flowmeter)

1.2. All variants

Note:

- The following data applies to all variants mentioned above.
- In the following table, the term “full scale” refers to full scale of volume flow rate, i.e. the flow rate corresponding to 10 m/s flow velocity.

Product properties	
Material	
Make sure the device materials are compatible with the fluid you are using. Further information can be found in chapter “3.1. Bürkert resistApp” on page 16.	
Further information on the materials can be found in chapter “3.2. Material specifications” on page 17.	
Non wetted parts	
Sensor housing	• For sensor with process connection size ≤ DN 50/2": stainless steel 304/1.4301 • For sensor with process connection size > DN 50/2": stainless steel 316L/1.4435
Wetted parts	
Measurement tube and process connection	Stainless steel 316L/1.4435 with low delta ferrite content
Surface quality	
Measurement tube (inner surface)	• Ra < 0.8 µm (30 µin.) or • Ra < 0.4 µm (15 µin.) (electro-polished) according to ISO 4288
Dimensions	Further information can be found in chapter “4. Dimensions” on page 20.
Measuring element	Interdigital transducers
Measuring principle	Based on SAW (Surface Acoustic Waves)

Measuring range	
Volume flow rate measurement	0…1.7 m³/h up to 0…200 m³/h Further information can be found in chapter **"10.6. Ordering chart FLOWave L flowmeter with or without industrial communication" on page 34** or **"10.7. Ordering chart FLOWave S flowmeter" on page 38**.
Density measurement [1.)]	0.8…1.3 g/cm³ (inactive by default, selectable upon request)
Mass flow rate measurement [1.)]	0…1 360 kg/h up to 0…260 000 kg/h (inactive by default, selectable upon request)
Temperature measurement	-20…+140 °C (-4…+284 °F)
Special function	Active by default, deselectable upon request. • ATF: acoustic transmission factor • DF: differentiation factor Further information can be found in chapter **"7.2. Special functions" on page 31**.

Performance data

Volume flow rate measurement

Under reference conditions i.e. measuring fluid = water free from gas bubbles and solids, ambient and water temperature =23 °C ±1 °C (73.4 °F ±1.8 F), and short refresh time, while maintaining turbulent or laminar flow profile, with the minimum inlet (40 x DN) and outlet (1 x DN) distances and the appropriate internal diameter of the pipes. Deviation from reference conditions can be adjusted through the use of a built-in correction K factor adjustment or Teach-in Procedure.

Measurement deviation	• From 10 % of full scale up to full scale: ±0.4 % of the measured value • From 1 % of full scale up to 10 % of full scale: ±0.08 % of full scale Further information can be found in chapter **"5.2. Measurement deviation table" on page 26**.
Repeatability	• From 10 % of full scale up to full scale: ±0.2 % of the measured value • From 1 % of full scale up to 10 % of full scale: ±0.04 % of full scale
Refresh time	Selectable between very short, short and long Further information can be found in chapter **"5.3. Refresh time table" on page 27**.

Density measurement As an option [1.)]

Under reference conditions i.e. measuring fluid = water free from gas bubbles and solids, ambient and water temperature =23 °C ±1 °C (73.4 °F ±1.8 F). Deviations from reference conditions, especially exposure of the device to temperatures above 90 °C can be adjusted through the use of a built in adjustment procedure (see **user manual Type 8098** ▶).

Measurement deviation	• Standard product adjustment: ±2 % of the measured value • After Teach-In: ±1 % of the measured value (at teach-in density value)
Repeatability	±1 % of the measured value
Refresh time	Selectable between very short, short and long Further information can be found in chapter **"5.3. Refresh time table" on page 27**.

Mass flow rate measurement As an option [1.)]

Under reference conditions i.e. measuring fluid = water free from gas bubbles and solids, ambient and water temperature =23 °C ±1 °C (73.4 °F ±1.8 F), and short refresh time, while maintaining turbulent or laminar flow profile, with the minimum inlet (40 x DN) and outlet (1 x DN) distances and the appropriate internal diameter of the pipes. Deviation from reference conditions, can be adjusted through the use of a built-in correction K factor adjustment or Teach-in Procedure.

Measurement deviation	• Standard K-factor: – From 10 % of full scale up to full scale: ±2.4 % of the measured value – From 1 % of full scale up to 10 % of full scale: ±(2 % of the measured value +0.08 % of full scale) • After Teach-In: – From 10 % of full scale up to full scale: ±1.4 % of the measured value at teach-in density and mass flow rate values – From 1 % of full scale up to 10 % of full scale: ±(1 % of the measured value +0.08 % of full scale) at teach-in density and mass flow rate values Further information can be found in chapter **"5.2. Measurement deviation table" on page 26**.
Repeatability	• From 10 % of full scale up to full scale: ±1.2 % of the measured value • From 1 % of full scale up to 10 % of full scale: ±(1 % of the measured value +0.04 % of full scale)
Refresh time	Selectable between very short, short and long Further information can be found in chapter **"5.3. Refresh time table" on page 27**.

Temperature measurement

Measurement deviation	• For T° ≤100 °C (+212 °F): ±1 °C (+1.8 °F) • For 100 °C (+212 °F) < T° <140 °C (+284 °F): ±1.5 %
Refresh time	Approx. 0.1 s

Original gravity measurement (degree Plato)	As an option [1.)]

Under reference conditions with flowing barley beer wort free from gas bubbles and solids, measured at ambient temperature = 23 °C ± 1 °C. For other types of wort, a different behaviour of the device can be observed. In this case, adjust the device using the concentration menus. See the **supplement to operating instructions for concentration measurement Type 8098** ▶ for more information.

Performance / **Measurement use case**	**Outlet section of the lauter tun**	**Outlet section of the kettle**	**Outlet section of wort chiller**
Measuring range	0…25 °P	8…25 °P	5…25 °P
Fluid temperature	65…80 °C	70…100 °C	5…25 °C
Measurement deviation	± 0.5 °P	± 0.5 °P	± 0.5 °P
Repeatability	± 0.2 °P	± 0.2 °P	± 0.2 °P
Resolution	0.01 °P	0.01 °P	0.01 °P

As the medium used to measure the degrees Plato differs from water, volumetric flow performances may vary from previously mentioned (see **"Volume flow rate measurement" on page 5**). In this case, adjust the measurements to the process conditions, using the teach-in process.

Electrical data	
Operating voltage	12…35 V DC ± 10 %, filtered and regulated Connection to main supply: permanent, through external SELV (Safety Extra Low Voltage) and LPS (Limited Power Source) power supply
Power source (not supplied)	Limited power source according to UL/EN 62368-1 standards or limited energy circuit according to UL/EN 61010-1 §9.4
DC reverse polarity protection	Yes
Voltage supply cable	
For cable gland	• 0.2…1.5 mm² cross-section • In nickel plated brass: – Cable with maximum operating temperature greater than + 80 °C (+ 176 °F) – 5…14 mm diameter, shielded cable • In stainless steel: – Cable with maximum operating temperature greater than + 80 °C (+ 176 °F) – 6…12 mm diameter, shielded cable
For 5-pin M12 male connector (A-coded)	• Cable with maximum operating temperature greater than + 80 °C (+ 176 °F) • 3…6.5 mm diameter, shielded cable, • 0.75 mm² cross-section to connect to 5-pin M12 female connector (A-coded, not supplied)
For 4-pin M12 female connector (D-coded)	• Cable with maximum operating temperature greater than + 80 °C (+ 176 °F) • 5e / CAT-5 min. category, 100 m max. length, shielded conductor with minimum STP
Medium data	
Fluid	The liquids should be non-dangerous, homogeneous, free of air or gas bubbles, free of suspended solids [2.)] and must comply with article 4, §1 of 2014/68/EU directive. Further information can be found in chapter **"2.4. Pressure Equipment Directive (PED)" on page 15**. By default the FLOWave flowmeter is set for a fluid with a sound velocity [3.)] • between 1000 m/s and 2000 m/s for process connection DN 08, ⅜" and ½" • between 800 m/s and 2300 m/s for process connection DN ≥ 15 or ≥ ¾"
Fluid temperature	• -20…+110 °C (-4…+230 °F). The maximum fluid temperature can be restricted by the ambient operating temperature. • Max. conditions for sterilisation process: up to + 140 °C (+ 284 °F) (+ 130 °C (+ 266 °F) for ATEX/IECEx variant) for max. 60 min • Maximum temperature gradient: 10 °C/s (18 °F/s) (measured by the integrated sensor on the device)

Fluid pressure (max.)

DN / **Pipe standard**	**DIN 11850**	**ISO 1127**	**ASME BPE**	**SMS 3008**
DN 08, ⅜", ½"	PN 25	PN 25	PN 25	–
DN 15, ¾", DN 25, 1", 1½"	PN 25	PN 25	PN 25	PN 25
DN 40	PN 25	PN 16	–	PN 25
DN 50, 2"	PN 16	PN 16	PN 16	PN 16
DN 65, 2½", DN 80, 3"	PN 10	PN 10	PN 10	–

Process/Pipe connection & communication	
Process connection size / pipe size[4.)] according to	
DIN 32676 series A / DIN 11850	Clamp: DN 08, DN 15, DN 25, DN 40, DN 50, DN 65 and DN 80
DIN 32676 series B / ISO 1127	Clamp: DN 08, DN 15, DN 25, DN 40, DN 50, DN 65 and DN 80
DIN 32676 series C / ASME BPE	Clamp: ⅜", ½", ¾", 1", 1½", 2", 2½" and 3"
DIN 11864-2 form A series A / DIN 11850	Aseptic collar flange (BF)[5.)]: DN 15, DN 25, DN 40, DN 50, DN 65 and DN 80
DIN 11864-2 form A series B / ISO 1127	Aseptic collar flange (BF)[5.)]: DN 08, DN 15, DN 25, DN 40, DN 50, DN 65 and DN 80
DIN 11864-2 form A series C / ASME BPE	Aseptic collar flange (BF)[5.)]: ½", ¾", 1", 1½" and 2"
DIN 11864-3 form A series A / DIN 11850	Aseptic collar clamp ferrule (BKS)[5.)]: DN 15, DN 25, DN 40 and DN 50
DIN 11864-3 form A series B / ISO 1127	Aseptic collar clamp ferrule (BKS)[5.)]: DN 08, DN 15, DN 25, DN 40 and DN 50
DIN 11864-3 form A series C / ASME BPE	Aseptic collar clamp ferrule (BKS)[5.)]: ½", ¾", 1", 1½" and 2"
SMS 3017 / SMS 3008	Clamp: DN 25, DN 40 and DN 50
DIN 11851 series A / DIN 11850	Thread: DN 65 and DN 80
Device status	LED light ring according to NAMUR NE 107
Approvals and conformities	
Directives	
CE directive	Further information on the CE Directive can be found in chapter "2.3. Standards" on page 14.
Pressure equipment directive	• Complying with article 4, paragraph 1 of 2014/68/EU directive Further information on the pressure equipment directive can be found in chapter "2.4. Pressure Equipment Directive (PED)" on page 15. • CRN 0C21751 declaration[6.)]
Explosion protection	On request: ATEX/IECEx
North America (USA/Canada)	On request: UL Listed for the USA and Canada
Foods and beverages/Hygiene	• 3-A (28-06) Sanitary Standards Inc. • EHEDG (Type EL CLASS I)[7.)] • FDA declaration of conformity • On request: – USP class VI declaration – ECR1935/2004 declaration
Materials	• Inspection certificate 3.1 • Certification of compliance ASME BPE • On request: – Certification of conformity for the surface quality DIN 4762, EN ISO 4287, EN ISO 4288 – Certification of conformity for passivation and electro-polishing processes
Others	• Fluidic test report (test regarding volumetric flow rate or volume and mass flow rates, if density and mass flow rate option chosen) • On request: – Calibration certificate (volumetric flow rate, volume and mass flow rates and density) – Test report 2.2 – MTBF (Mean Time Between Failures) manufacturer declaration
Environment and installation	
Ambient temperature	• Operation: depends on the fluid temperature. Further information can be found in chapter "5.1. Medium temperature diagram" on page 25. • Storage: -20…+70 °C (-4…+158 °F)
Relative air humidity	≤85 %, without condensation
Height above sea level	Max. 2000 m
Operating condition	Continuous
Equipment mobility	Fixed device
Application range	Indoor and outdoor Protect the device against electromagnetic interference, ultraviolet rays and, when installed outdoors, against the effects of climatic conditions.

Degree of protection [8.)]	IP65, IP67 (according to IEC/EN 60529), NEMA 4X (according to NEMA250), if the product is wired and if the cable glands are tightened and the covers are screwed tight. Unused cable glands must be sealed with the stopper gaskets provided (mounted upon delivery of the product). An unused M12 fixed connector must be protected by the screwed plug.
Installation category	Category I according to UL/EN 61010-1
Pollution degree	Degree 2 according to UL/EN 61010-1

1.) Only for a flowmeter with a process connection size of DN 08…DN 80 or ½"…3"

2.) For fluids beyond this range, either check signal availability and stability under the target DN and process conditions, or contact your Bürkert sales office.

3.) Customer specific setting on request. Contact your Bürkert sales office.

4.) See dimension tables of the sensor in chapters **“4.4. Flowmeter with clamp connection” on page 21**, **“4.5. Flowmeter with aseptic collar flange connection (BF)” on page 23**, **“4.6. Flowmeter with aseptic collar clamp connection (BKS)” on page 24**, **and “4.7. Flowmeter with thread connection” on page 25**.

5.) In German: BF = Bundflansch, BKS= Bundklemmstutzen

6.) Only for a flowmeter with a process connection size of ¾"…2", pending for the other sizes.

7.) The EHEDG compliance for :

- clamp connection according to DIN 32676 is only valid if used in combination with EHEDG-compliant gaskets from Combifit International B.V.
- threaded connection according to DIN 11851 is only valid if used in combination with EHEDG-compliant gaskets from
  1. Kieselmann GmbH, Germany (ASEPTO-STAR k-flex upgrade gaskets) or
  2. Siersema Komponenten Service (S.K.S.) B.V. (Netherlands SKS gasket set DIN 11851 EHEDG with EPDM or FKM inner gasket).

8.) Not evaluated by UL, only IP64 is evaluated by the ATEX notified body and by the IECEx certified body.

1.3. FLOWave L flowmeter

The FLOWave L flowmeter is available in four variants of the transmitter:

- Stainless steel transmitter with nickel plated brass cable glands and M12 male connector
- Stainless steel transmitter with stainless steel cable glands and M12 male connector (full stainless steel variant)
- Stainless steel transmitter with stainless steel M12 female and male connectors and industrial communication (Ethernet variant)
- Stainless steel transmitter with stainless steel cable glands and M12 male connector (ATEX/IECEx variant).

With or without industrial communication

The following data applies to all variants (unless otherwise stated).

Product properties	
Material	
Further information on the materials can be found in chapter **"3.2. Material specifications" on page 17**.	
Non wetted parts	
Blind cover	Stainless steel 304/1.4301
Transmitter housing	Stainless steel 304/1.4301
Functional earth element	Cylinder screw, washer, washer spring in stainless steel A4 and blind rivet nut in stainless steel 1.4578/ A4
Pressure compensating element	Diaphragm in ePTFE (expanded polytetrafluoroethylene), O-ring in silicone 60 Shore A, body in stainless steel
Display module	Float glass, stainless steel 304/1.4301and EPDM (ethylene propylene diene monomer) seal
Seal	VMQ silicone (Methyl Vinyl Silicone)
M12 fixed connector and screwed plug	• 4-pin M12 female connector: – Body in stainless steel 304L/1.4307, contact support in PBT GF30 (Polybutyleneterephthalate 30 % glass fibre reinforced) and seal in EPDM • 5-pin M12 male connector: – Body in nickel plated brass and seal in NBR (nitrile butadiene rubber) or – Body in stainless steel 316L/1.4404 and seal in NBR or VMQ silicone
Cable gland	• Body in nickel plated brass and seal in TPE (thermoplastic elastomer) or • Body in stainless steel 304L/1.4307 and seal in TPE (FDA-compliant) or • Body in stainless steel 316L/1.4404 and seal in EPDM
Blind plug	Black POM (polyoxymethylene), PA6 or PA
Display	• 2.4", monochrome graphic (240 × 160 pixels) • Languages: German, English, French

Weight (approx. in kg)	**DN 08, ⅜", ½"**	**DN 15, ¾"**	**DN 25, 1"**	**DN 40, 1½"**	**DN 50, 2"**	**DN 65, 2½"**	**DN 80, 3"**
Clamp	2.1	2	2.2	3	3.2	5.4	5.5
Flange	2.3	2.4	2.7	3.6	3.8	6	6.2
Thread (dairy thread)	–	–	–	–	–	5.7	6.1

Performance data	
Frequency resolution	0.05 Hz over 0…2 000 Hz range
4…20 mA output uncertainty	±0.04 mA
4…20 mA output resolution	0.8 µA

Electrical data	
Power consumption	Without any consumption of output • For device with 2 x M20 × 1.5 cable glands and 1 × 5-pin M12 male connector: max. 5 W • For device with 2 × 4-pin M12 female connectors and 1 × 5-pin M12 male connector, Ethernet variant: max. 8 W • For device with 2 × 4-pin M12 female connectors and 1 × 5-pin M12 male connector, Ethernet variant, with display module: max. 9 W
Output	**Valid for non-Ethernet variants only**
Number of outputs	3 (1 digital, 1 analogue and 1 configurable: digital or analogue)
Digital output	Overload information (through software diagnostics function) Transistor: • Type: NPN or PNP (wiring dependent), open collector, galvanically isolated • Operating modes: pulse (by default), On/Off, threshold, frequency (user configurable) • 10 kHz, 5…35 V DC, max. 700 mA, max. pulse duration: 2 s, selectable limits: – 0.0001…10 000 pulses/litre or 0.0001…9 999.99 litres/pulse – 0.0001…10 000 pulses/kg or 0.0001…9 999.99 kg/pulse [1.)] • Protected against polarity reversals of DC and overloads
Analogue output	Open loop detection (through software diagnostics function) Current: • 4…20 mA • 3.6 mA or 22 mA to indicate an error (only if 4…20 mA scale selected); galvanically isolated • Max. loop impedance: 1 300 Ω at 35 V DC, 1 000 Ω at 30 V DC, 700 Ω at 24 V DC, 450 Ω at 18 V DC
Process/Pipe connection & communication	
Electrical connection	2 x M20 × 1.5 cable glands and 1 × 5-pin M12 male connector (A-coded) for non-Ethernet variants only
Data transfer	External communication through büS (Bürkert system bus, CANopen protocol)
Environment and installation	
Ambient temperature	Operation: • For device with 2 x M20 × 1.5 cable glands and 1 × 5-pin M12 male connector: – -10…+70 °C (+14…+158 °F) or -10…+40 °C (+14…+104 °F) for ATEX/IECEx variant, if -20 °C (4 °F) ≤ fluid temperature ≤ 80 °C (176 °F), – At a fluid temperature > 80 °C (176 °F), the maximum ambient temperature decreases linearly from 70 °C (158 °F) up to 40 °C (104 °F) or from 40 °C (104 °F) up to 30 °C (86 °F) for ATEX/IECEx variant. This means that at a fluid temperature of 80 °C (176 °F) the ambient temperature may be a maximum of 70 °C and at a fluid temperature of 140 °C (130 °C for the ATEX/IECEx variant) the ambient temperature may only be a maximum of 40 °C (30 °C for the ATEX/IECEx variant). • For device with 2 × 4-pin M12 female connectors and 1 × 5-pin M12 male connector, Ethernet variant: -10…+55 °C (+14…+131 °F) Further information can be found in chapter **"5.1. Medium temperature diagram" on page 25**.

1.) Only if option density and mass flow is activated.

With industrial communication (Ethernet variant)

Process/Pipe connection & communication	
Electrical connection	2 × 4-pin M12 female connectors (D-coded) and 1 × 5-pin M12 male connector (A-coded)
Industrial Communication	
Supported network protocol	• Modbus TCP • PROFINET • EtherNet/IP • EtherCAT
Light-emitting diode	• 2 Link/Act LEDs (green) • 2 Link LEDs (yellow)
Modbus TCP protocol	
Protocol	Internet protocol, version 4 (IPv4)
Network topology	• Tree • Star • Line (open daisy chain)
IP configuration	• Static IP address • Not supported: BOOTP (Bootstrap Protocol), DHCP (Dynamic Host Configuration)
Transmission speed	10 or 100 MBit/s
PROFINET protocol	
PROFINET IO specification	V2.3
Network topology	• Tree • Star • Ring (closed daisy chain) • Line (open daisy chain)
Network management	• LLDP (Link Layer Discovery Protocol) • SNMP V1 (Simple Network Management Protocol) • MIB (Management Information Base)
IP configuration	• DCP (Discovery and Configuration Protocol) • Manual (Device naming and IP setting)
Transmission speed	100 MBit/s full duplex
Maximum supported conformance class	CC-B
Media Redundancy (for ring topology)	MRP client is supported
GSDml file	See **Device Description Files Type 8098** ▸ on the website under “Software”.
EtherNet/IP protocol	
Protocol	Internet protocol, version 4 (IPv4)
Network topology	• Tree • Star • Ring (closed daisy chain) • Line (open daisy chain) • Linear (open Daisy Chain)
IP configuration	• Static IP address • BOOTP (Bootstrap Protocol) • DHCP (Dynamic Host Configuration Protocol)
Transmission speed	10 or 100 MBit/s
Duplex mode	Half duplex, full duplex, auto-negotiation
MDI mode (Medium Dependant Interface)	Auto-MDIX
Predefined standard objects	Identity, Message Router, Assembly, Connection Manager, DLR, QoS, TCP/IP Interface, EtherNet Link object
EDS file	See **Device Description Files Type 8098** ▸ on the website under “Software”.

EtherCAT protocol [1.)]	
Industrial Ethernet interface X1, X2	X1: EtherCAT IN, X2: EtherCAT OUT
Maximum number of cyclic input/output data	512 bytes in total
Maximum number of cyclic input data	1024 bytes
Maximum number of cyclic output data	1024 bytes
Acyclic communication (CoE)	• SDO • SDO master-slave • SDO slave-slave (depends on master capacity)
Type	Complex slave
Fieldbus Memory Management Unit (FMMU)	8
Sync Manager	4
Transmission speed	100 Mbit/s
Approvals and conformities	
Others	Network protocol: • PROFINET • EtherNet/IP • EtherCAT®

1.) EtherCAT® is a registered trademark and patented technology, licensed by Beckhoff Automation GmbH.

1.4. FLOWave S flowmeter

The FLOWave S flowmeter is available in four variants of the transmitter:

- Stainless steel transmitter without output and with stainless steel 5-pin M12 male connector
- Stainless steel transmitter with 2 configurable outputs (DO/AO) and stainless steel 8-pin M12 male connector
- Stainless steel transmitter without output and with stainless steel 5-pin M12 male connector (ATEX/IECEx variant)
- Stainless steel transmitter with 2 configurable outputs (DO/AO) and stainless steel 8-pin M12 male connector (ATEX/IECEx variant)

Product properties							
Material							
Further information on the materials can be found in chapter **"3.2. Material specifications" on page 17**.							
Non wetted parts							
Cover	Stainless steel 304/1.4301						
Light guide	PC (Polycarbonate) and O-ring in EPDM (Ethylene Propylene Diene Monomer)						
Transmitter housing	Stainless steel 304/1.4301						
Functional earth element	Cylinder screw, washer, washer spring in stainless steel A4 and jumper of the ground terminal in stainless steel 304L						
Seal	Between sensor and transmitter: VMQ silicone (Methyl Vinyl Silicone)						
M12 fixed connector and screwed plug	5- or 8-pin M12 male connector: stainless steel 316L/1.4404 or 303/1.4305 and with seal in EPDM						
Weight (approx. in kg)	**DN 08, ⅜", ½"**	**DN 15, ¾"**	**DN 25, 1"**	**DN 40, 1½"**	**DN 50, 2"**	**DN 65, 2½"**	**DN 80, 3"**
Clamp	1.7	1.6	1.8	2.6	2.8	5.0	5.1
Flange	1.9	2.0	2.3	3.2	3.4	5.6	5.8
Thread (dairy thread)	–	–	–	–	–	5.3	5.7
Electrical data							
Power consumption	• For device without output: max. 2.5 W • For device with 2 outputs (DO/AO): max. 5 W						
Output	**Only for device with 8-pin M12 male connector**						
Number of outputs	2, each configurable as digital or analogue output						
Digital output	Overload information (through software diagnostics function) Transistor: • Type: NPN or PNP (wiring dependent), open collector, galvanically isolated • Operating modes: pulse (by default), On/Off, threshold, frequency (user configurable) • 10 kHz, 5…35 V DC, max. 700 mA, max. pulse duration: 2 s, selectable limits: – 0.0001…10 000 pulses/litre or 0.0001…9 999.99 litres/pulse – 0.0001…10 000 pulses/kg or 0.0001…9 999.99 kg/pulse [1.)] • Protected against polarity reversals of DC and overloads						
Analogue output	Open loop detection (through software diagnostics function) Current: • 4…20 mA • 3.6 mA or 22 mA to indicate an error (only if 4…20 mA scale selected); galvanically isolated • Max. loop impedance: 1300 Ω at 35 V DC, 1000 Ω at 30 V DC, 700 Ω at 24 V DC, 450 Ω at 18 V DC						
Process/Pipe connection & communication							
Electrical connection	• 1 × 5-pin M12 male connector (A-coded) for device without output • 1 × 8-pin M12 male connector (A-coded) for device with 2 outputs						

Data transfer	• Device without output: external communication through büS (Bürkert system bus, CANopen protocol) • Device with 2 outputs: büS connection only to the Bürkert Communicator for configuration and software update of the device. Due to the missing CAN shield the conventional büS/ CANopen communication is not recommended.
Environment and installation	
Ambient temperature	Operation: • All variants except ATEX/IECEx variant: – -10…+70 °C (+14…+158 °F) if -20 °C (4 °F) ≤ fluid temperature ≤80 °C (176 °F) – at a fluid temperature >80 °C (176 °F), the maximum ambient temperature decreases linearly from 70 °C (158 °F) up to 40 °C (104 °F). This means that at a fluid temperature of 80 °C (176 °F) the ambient temperature may be a maximum of 70 °C (158 °F) and at a fluid temperature of 140 °C (284 °F) the ambient temperature may only be a maximum of 40 °C (104 °F). • ATEX/IECEx variant: – -10…+60 °C (+14…+140 °F) if -20 °C (4 °F) ≤ fluid temperature ≤100 °C (212 °F) – at a fluid temperature >100 °C (212 °F), the maximum ambient temperature decreases linearly from 60 °C (140 °F) up to 45 °C (136 °F). This means that at a fluid temperature of 100 °C (212 °F) the ambient temperature may be a maximum of 60 °C (140 °F) and at a fluid temperature of 130 °C (266 °F) the ambient temperature may only be a maximum of 45 °C (136 °F) Further information can be found in chapter **"5.1. Medium temperature diagram" on page 25**.

1.) Only if option density measurement and mass flow rate measurement is activated

2. Approvals and conformities

2.1. General notes

- The approvals and conformities listed below must be stated when making enquiries. This is the only way to ensure that the product complies with all required specifications.
- Not all available variants of the device can be supplied with the below mentioned approvals or conformities.

2.2. Conformity

In accordance with the Declaration of Conformity, the product is compliant with the EU Directives.

2.3. Standards

The applied standards which are used to demonstrate compliance with the EU Directives are listed in the EU-Type Examination Certificate and/or the EU Declaration of Conformity.

2.4. Pressure Equipment Directive (PED)

The device conforms to article 4, paragraph 1 of the Pressure Equipment Directive (PED) 2014/68/EU under the following conditions:

Device used on a pipe

Note:

- The data in the table is independent of the chemical compatibility of the material and the fluid.
- PS = maximum admissible pressure (in bar), DN = nominal diameter of the pipe

Type of fluid	Conditions
Fluid group 1, article 4, paragraph 1.c.i	DN ≤ 25
Fluid group 2, article 4, paragraph 1.c.i	DN ≤ 32 or PS*DN ≤ 1000
Fluid group 1, article 4, paragraph 1.c.ii	DN ≤ 25 or PS*DN ≤ 2000
Fluid group 2, article 4, paragraph 1.c.ii	DN ≤ 200 or PS ≤ 10 or PS*DN ≤ 5000

2.5. Explosion protection

<table>
<tr><th>Approval</th><th>Description</th></tr>
<tr><td></td><td>
Optional: Explosion protection
As a category 3 device suitable for zone 2/22 (optional).

Ex marking of the components according to the following table:
<table>
<tr><th>FLOWave L flowmeter</th><th>FLOWave S flowmeter</th></tr>
<tr><td>ATEX
• II 3G Ex ec IIC T4 Gc
• II 3D Ex tc IIIC T110 °C Dc or T130 °C Dc

IECEx
• Ex ec IIC T4 Gc
• Ex tc IIIC T110 °C Dc or T130 °C Dc</td><td>ATEX
• II 3G Ex ec IIC T4 Gc
• II 3D Ex tc IIIC T130 °C Dc

IECEx
• Ex ec IIC T4 Gc
• Ex tc IIIC T130 °C Dc</td></tr>
</table>
Measures to comply with ATEX/IECEx requirements: refer to the
• Supplement Type 8098 FLOWave L | ATEX/IECEx Variant ▶ or
• Supplement Type 8098 FLOWave S | ATEX/IECEx Variant ▶
under user manual.

The Ex. certification is only valid if the Bürkert device is used as described in the supplement ATEX/IECEx. If unauthorized changes are made to the device, the Ex. certification becomes invalid.
</td></tr>
</table>

2.6. North America (USA/Canada)

Approval	Description
	Optional: UL Listed for the USA and Canada The products are UL Listed for the USA and Canada according to: • UL 61010-1 (ELECTRICAL EQUIPMENT FOR MEASUREMENT, CONTROL, AND LABORATORY USE – Part 1: General Requirements) • CAN/CSA-C22.2 No. 61010-1 Certificate number: 2017-10-27-E237737

2.7. Foods and beverages/Hygiene

Approval	Description
	3-A Sanitary Standards Inc. (valid for the variable code PE05) The products comply with 3-A Sanitary Standards Inc (3-A SSI) as per certificate. Certificate authorization number: 1178
	EHEDG (European Hygienic Engineering and Design Group) (Type EL CLASS I) (valid for the variable code PI01) The EHEDG compliance is only valid • if the flowmeter with clamp connection according to DIN 32676 is used in combination with gaskets from Combifit International B.V. • if the flowmeter with threaded connection according to DIN 11851 is used in combination with gaskets from – Kieselmann GmbH, Germany (ASEPTO-STAR k-flex upgrade gaskets) or – Siersema Komponenten Service (S.K.S.) B.V. (Netherlands SKS gasket set DIN 11851 EHEDG with EPDM or FKM inner gasket)

Conformity	Description
FDA	**FDA – Code of Federal Regulations (valid for the variable code PL02, PL03)** The devices are compliant in their composition with the Code of Federal Regulations published by the FDA (Food and Drug Administration, USA) according to the manufacturer's declaration.
USP	**United States Pharmacopeial Convention (USP) (valid for the variable code PL04)** All wetted materials are biocompatible according to the manufacturer's declaration.
	EC Regulation 1935/2004 of the European Parliament and of the Council (valid for the variable code PL01, PL02) All wetted materials are compliant with EC Regulation 1935/2004 according to the manufacturer's declaration.

2.8. Others

Network protocol

Approval	Description
	PROFINET Certificate number: Z12446
	EtherNet/IP Document number: 11839
	EtherCAT® is a registered trademark and patented technology, licensed by Beckhoff Automation GmbH.

3. Materials

3.1. Bürkert resistApp

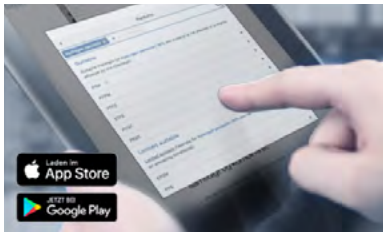

Bürkert resistApp – Chemical resistance chart

You want to ensure the reliability and durability of the materials in your individual application case? Verify your combination of media and materials on our website or in our resistApp.

Start chemical resistance check

3.2. Material specifications

FLOWave L flowmeter without industrial communication

Note:
The following picture describes a device with 2 x M20 × 1.5 cable glands, 1 × 5-pin M12 connector and clamp connection.

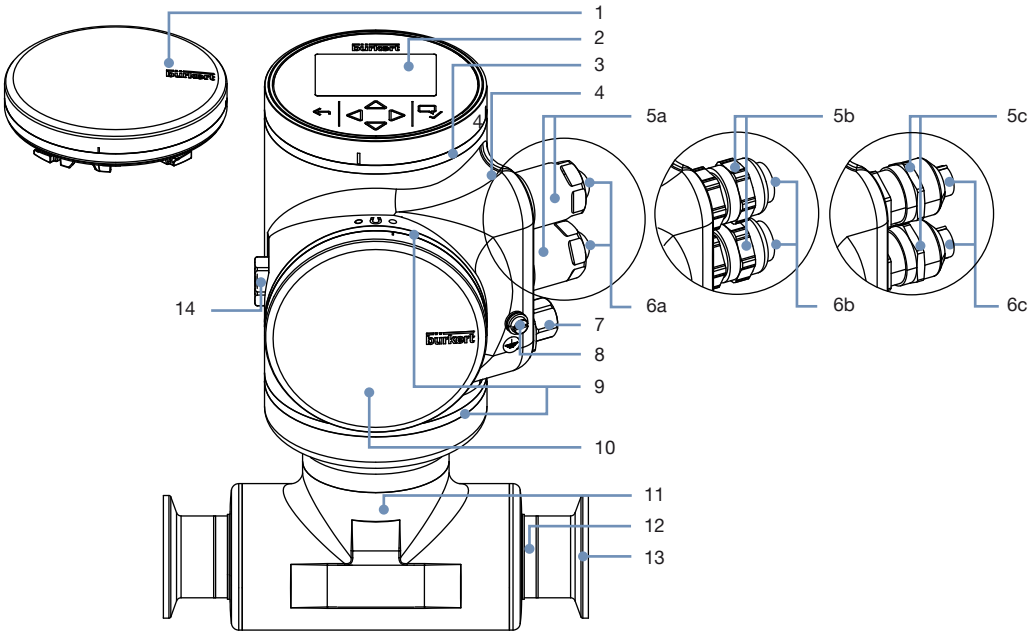

No.	Element	Material
1	Blind cover	Stainless steel 304/1.4301
2	Display module	Float glass, stainless steel 304/1.4301
3	Multi-colour LED behind seal (used for e.g. to indicate the status of the product, based on the NAMUR NE 107 standard)	VMQ silicone
4	Transmitter housing	Stainless steel 304/1.4301
5a	Cable gland (full stainless steel variant)	Body in stainless steel 304L/1.4307 and seal in TPE (according to FDA)
5b	Cable glands	Body in nickel plated brass and seal in TPE
5c	Cable glands (ATEX/IECEx variant)	Body in stainless steel 316L/1.4404 and seal in EPDM
6a	Blind plug (full stainless steel variant)	PA6
6b	Blind plug	Black POM
6c	Blind plug (ATEX/IECEx variant)	PA
7	5-pin M12 male connector (wired to büS) with screwed plug	• Body in stainless steel 316L/1.4404 and seal in NBR (if equipped with 5a) or in VMQ silicone (if equipped with 5c) or • Body in nickel plated brass and seal in NBR (if equipped with 5b)
8	Functional earth	Cylinder screw, washer, washer spring in stainless steel A4 and blind rivet nut in stainless steel 1.4578/A4
9	Seal	VMQ silicone
10	Blind cover	Stainless steel 304/1.4301
11	Sensor housing	For sensor with process connection: • ≤ DN 50/2": stainless steel 304/1.4301 • > DN 50/2": stainless steel 316L/1.4435
12	Sensor measurement tube	Stainless steel 316L/1.4435 with low delta ferrite content
13	Process connection (either clamp connections or flange connections)	Stainless steel 316L/1.4435 with low delta ferrite content
14	Pressure compensating element	Diaphragm in ePTFE, O-ring in silicone 60 Shore A and body in stainless steel (316L/1.4404)

FLOWave L flowmeter with industrial communication

Note:
The following picture describes a device (Ethernet variant) with 2 × 4-pin M12 female connectors, 1 × 5-pin M12 male connector and flange connection.

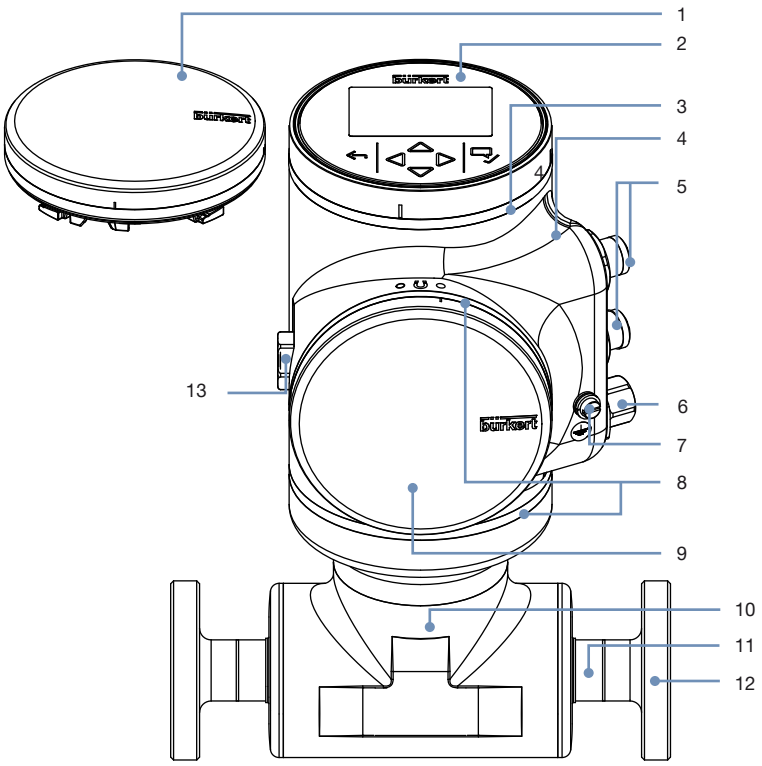

No.	Element	Material
1	Blind cover or	Stainless steel 304/1.4301
2	Display module	Float glass, stainless steel 304/1.4301
3	Multi-colour LED behind seal (used for e.g. to indicate the status of the product, based on the NAMUR NE 107 standard)	VMQ silicone
4	Transmitter housing	Stainless steel 304/1.4301
5	4-pin M12 female connectors with screwed plug	Body in stainless steel 304L/1.4307, contact support in PBT GF30 and seal in EPDM
6	5-pin M12 male connector (wired to büS) with screwed plug	Body in stainless steel 316L/1.4404 and seal in NBR
7	Functional earth	Cylinder screw, washer, washer spring: stainless steel A4 blind rivet nut: stainless steel 1.4578/A4
8	Blind cover	VMQ silicone
9	Seal	Stainless steel 304/1.4301
10	Sensor housing	Stainless steel 304/1.4301 [1.)]
11	Sensor measurement tube	Stainless steel 316L/1.4435 with low delta ferrite content
12	Process connection (either clamp connections or flange connections)	Stainless steel 316L/1.4435 with low delta ferrite content
13	Pressure compensating element	Diaphragm: ePTFE; support: polyester; O-ring: silicone 60 Shore A; body: stainless steel (316L/1.4404)

1.) If clamp connections according to DIN 32676 or threaded connections according to DIN 11851 are used instead of flange connections, the material of the sensor housing for DN > 50 is stainless steel 316L/1.4435

FLOWave S flowmeter

Note:
The following picture shows a device with 1 × 5-pin M12 male connector and clamp connection.

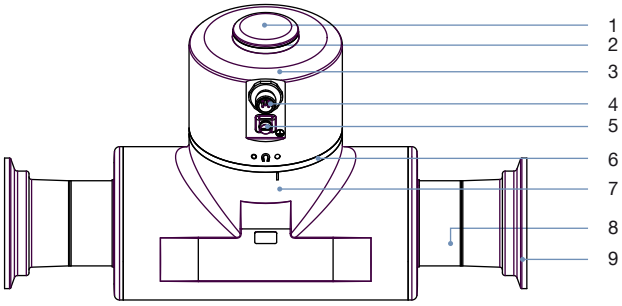

No.	Element	Material
1	Cover	Stainless steel 304/1.4301
2	Light guide for status display behind seal (used for e.g. indicating the status of the product, based on the NAMUR NE 107 standard)	PC and O-ring in EPDM
3	Transmitter housing	Stainless steel 304/1.4301
4	5-pin M12 male connector (wired to büS) with screwed plug or 8-pin M12 male connector (wired to büS as service interface [1.)] and 2 x DO/AO) (with screwed plug)	Stainless steel 316L/1.4404 or 303/1.4305 and seal in EPDM
5	Functional earth	• Cylinder screw, washer, washer spring: stainless steel A4 • Jumper of the ground terminal: stainless steel 304L
6	Seal	VMQ silicone
7	Sensor housing	For sensor with process connection: • ≤ DN 50/2": stainless steel 304/1.4301 • > DN 50/2": stainless steel 316L/1.4435
8	Sensor measurement tube	Stainless steel 316L/1.4435 with low delta ferrite content
9	Process connection (either clamp connections or flange connections)	Stainless steel 316L/1.4435 with low delta ferrite content

1.) büS connection to the Bürkert communicator only for configuration and software update of the device. Due to the lack of CAN shielding, the conventional büS/CANopen communication is not recommended.

4. Dimensions

4.1. Transmitter of the FLOWave L flowmeter without industrial communication

Note:
Dimensions in mm, unless otherwise stated

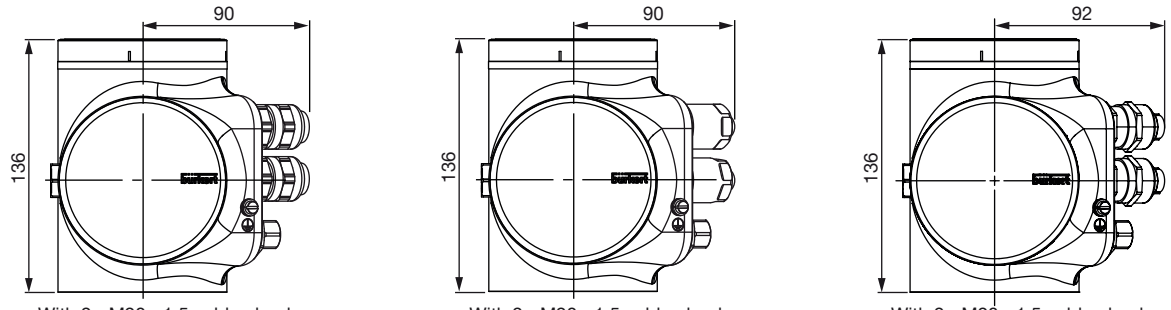

With 2 x M20 x 1.5 cable glands
in nickel plated brass
and 1 x 5-pin M12 male connector

With 2 x M20 x 1.5 cable glands
in stainless steel
and 1 x 5-pin M12 male connector
full stainless steel variant

With 2 x M20 x 1.5 cable glands
in stainless steel
and 1 x 5-pin M12 male connector
ATEX/IECEx variant

4.2. Transmitter of the FLOWave L flowmeter with industrial communication (Ethernet variant)

Note:
Dimensions in mm, unless otherwise stated

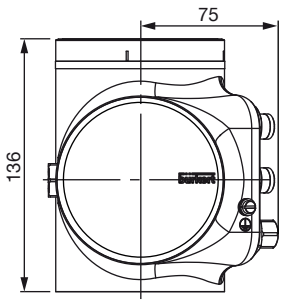

Ethernet variant
with 2 x 4-pin M12 female connectors
and 1 x 5 pin M12 male connector

4.3. Transmitter of the FLOWave S flowmeter

Note:
Dimensions in mm, unless otherwise stated

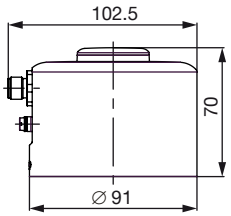

With 1 x 5- or 8-pin
male connector

4.4. Flowmeter with clamp connection

Note:

- Dimensions in mm, unless otherwise stated
- Clamp connection according to DIN 32676 series A, B or C, or SMS 3017

Sensor with process connection size ≤ DN 50/2"

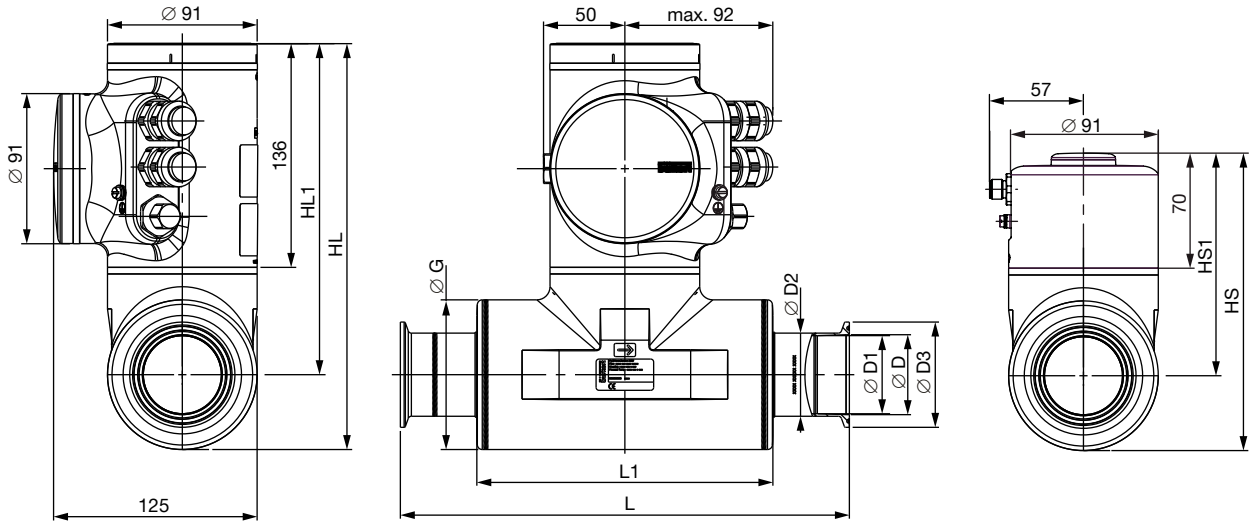

Sensor with process connection size > DN 50/2"

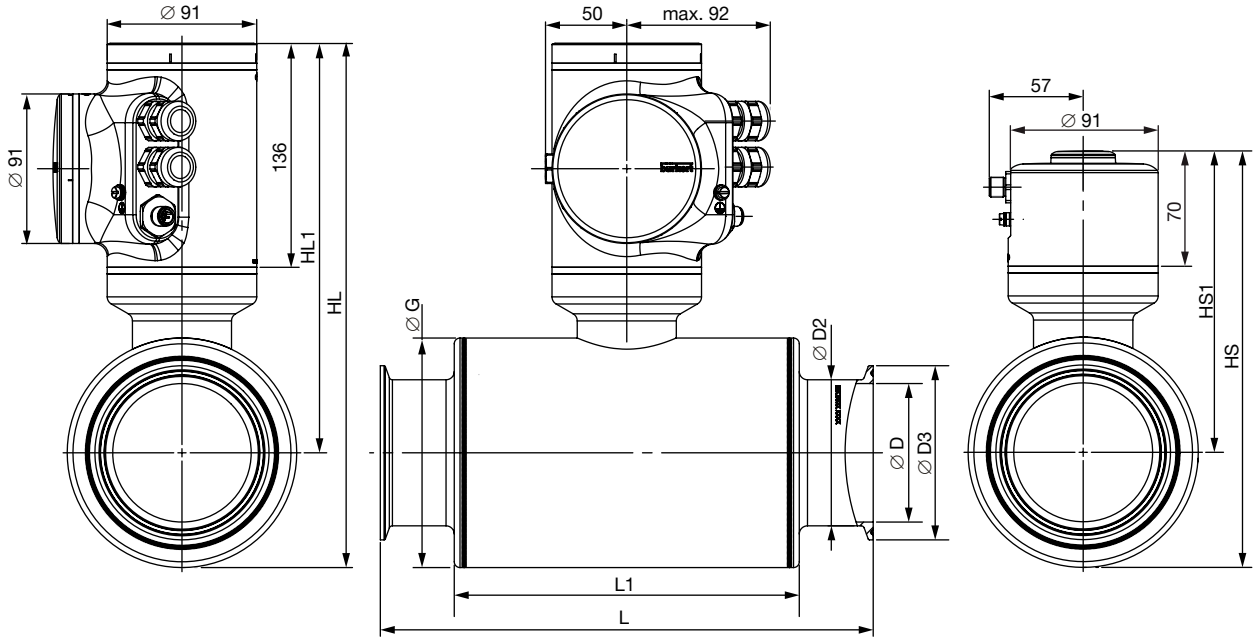

Process connection and pipe size [mm]	[inch]	HL	HS	HL1	HS1	L	L1	ØD	ØD1	ØD2	ØD3	ØG
Clamp according to DIN 32676 series A and process pipe according to DIN 11866 series A (DIN 11850)												
08	–	250	184	220	154	158	105	10	10	14	34	60.3
15 1.)	–	250	184	220	154	166	105	16	15.75	19.05	34	60.3
25 1.)	–	250	184	220	154	236	105	26	22.1	25.4	50.5	60.3
40 1.)	–	250	184	200	134	326	180	38	34.8	38.1	50.5	91
50 1.)	–	250	184	200	134	306	180	50	47.5	50.8	64	91
65	–	321	255	251	185	300	210	66	66	70	91	139.7
80	–	321	255	251	185	300	210	81	81	85	106	139.7
Clamp according to DIN 32676 series B and process pipe according to DIN 11866 series B (ISO 1127)												
08	–	250	184	220	154	158	105	10.3	10.3	14	25	60.3
15	–	250	184	220	154	168	105	18.1	18.1	21.3	50.5	60.3
15 2.)	–	250	184	220	154	168	105	18.1	18.1	21.3	34	60.3
25	–	250	184	220	154	175	120	29.7	29.7	33.7	50.5	60.3
40	–	250	184	200	134	273	180	44.3	44.3	48.3	64	91
50	–	250	184	200	134	273	180	56.3	56.3	60.3	77.5	91
65	–	321	255	251	185	300	210	72.1	72.1	76.1	91	139.7
80	–	321	255	251	185	300	210	84.3	84.3	88.9	106	139.7
Clamp according to DIN 32676 series C and process pipe according to DIN 11866 series C (ASME BPE)												
–	⅜	250	184	220	154	158	105	7.75	7.75	14	25	60.3
–	½	250	184	220	154	158	105	9.4	9.4	14	25	60.3
–	¾	250	184	220	154	143	105	15.75	15.75	19.05	25	60.3
–	1	250	184	220	154	143	105	22.1	22.1	25.4	50.5	60.3
–	1½	250	184	200	134	273	180	34.8	34.8	38.1	50.5	91
–	2	250	184	200	134	273	180	47.5	47.5	50.8	64	91
–	2½	321	255	251	185	300	210	60.2	60.2	63.5	77.5	139.7
–	3	321	255	251	185	300	210	72.9	72.9	76.2	91	139.7
Clamp according to SMS 3017 and process pipe according to SMS 3008												
25 1.)	–	250	184	220	154	143	105	22.6	22.1	25.4	50.5	60.3
40 1.)	–	250	184	200	134	273	180	35.6	34.8	38.1	50.5	91
50 1.)	–	250	184	200	134	273	180	48.6	47.5	50.8	64	91

1.) DIN 32676 series A and SMS 3017 based on ASME BPE measurement tube sizes with adapted concentric clamp connection, design according to EHEDG DOC8 guidelines
2.) Similar to DIN 32676 series B, but with clamp connection 34.0

4.5. Flowmeter with aseptic collar flange connection (BF)

Note:

- Dimensions in mm, unless otherwise stated
- Aseptic collar flange connection (BF) according to DIN 11864-2 form A series A, B or C

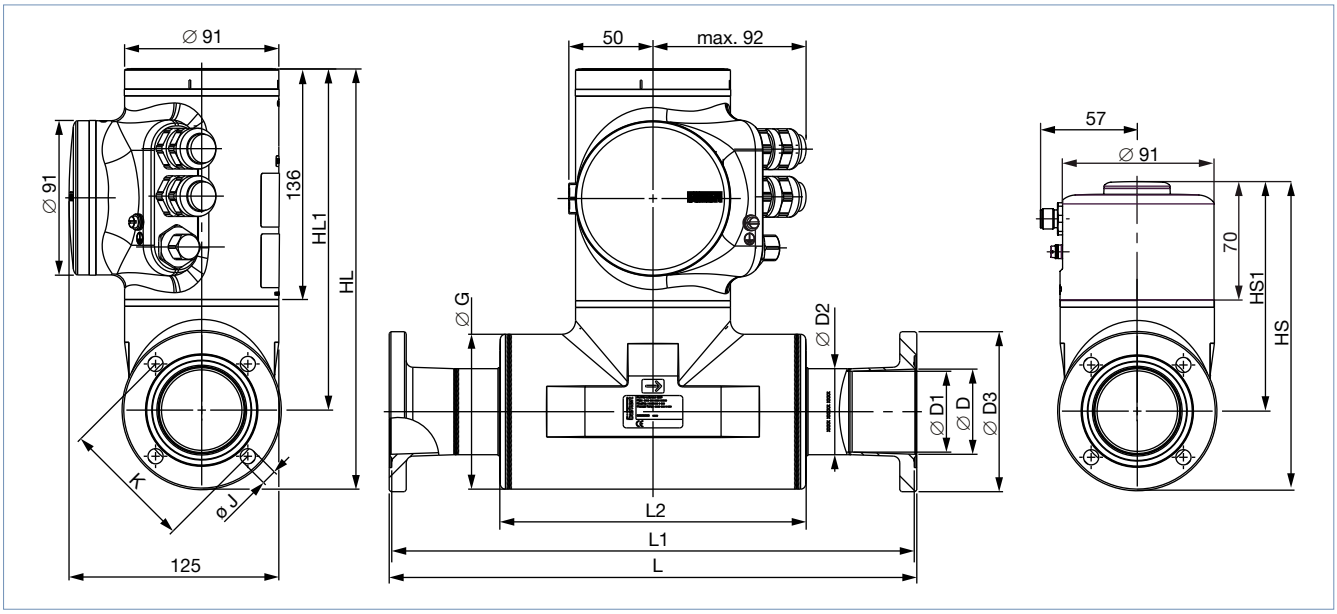

Process connection and pipe size [mm]	[inch]	HL	HS	HL1	HS1	L	L1	L2	ØD	ØD1	ØD2	ØD3	ØG	ØJ	K
Flange according to DIN 11864-2 series A and process pipe according to DIN 11866 series A (DIN 11850)															
15 1.)	–	250	184	220	154	166	163	105	16	15.75	19.05	59	60.3	9	42
25 1.)	–	250	184	220	154	240	237	105	26	22.1	25.4	70	60.3	9	53
40 1.)	–	250	184	200	134	330	327	180	38	34.8	38.1	82	91	9	65
50 1.)	–	250	184	200	134	310	307	180	50	47.5	50.8	94	91	9	77
65	–	321	255	251	185	300	297	210	66	66	70	113	139.7	9	95
80	–	350	283	265	199	300	297	210	81	81	85	133	168.3	11	112
Flange according to DIN 11864-2 series B and process pipe according to DIN 11866 series B (ISO 1127)															
08	–	250	184	220	154	158	155	105	10.3	10.3	14	54	60.3	9	37
15	–	250	184	220	154	173	170	105	18.1	18.1	21.3	62	60.3	9	45
25	–	250	184	220	154	190	187	120	29.7	29.7	33.7	74	60.3	9	57
40	–	250	184	200	134	278	275	180	44.3	44.3	48.3	88	91	9	71
50	–	250	184	200	134	265	262	180	56.3	56.3	60.3	103	91	9	85
65	–	350	283	265	199	300	29	210	72.1	72.1	76.1	125	168.3	11	104
80	–	350	283	265	199	300	197	210	84.3	84.3	88.9	137	168.3	11	116
Flange according to DIN 11864-2 series C and process pipe according to DIN 11866 series C (ASME BPE)															
–	½	250	184	220	154	158	155	105	9.4	9.4	14	54	60.3	9	37
–	¾	250	184	220	154	171	168	105	15.75	15.75	19.05	59	60.3	9	42
–	1	250	184	220	154	168	165	105	22.1	22.1	25.4	66	60.3	9	49
–	1½	250	184	200	134	278	275	180	34.8	34.8	38.1	79	91	9	62
–	2	250	184	200	134	278	275	180	47.5	47.5	50.8	92	91	9	75

1.) DIN 11864-2 series A based on ASME BPE measurement tube sizes with adapted concentric flange connection, design according to EHEDG DOC8 guidelines

4.6. Flowmeter with aseptic collar clamp connection (BKS)

Note:

- Dimensions in mm, unless otherwise stated
- Aseptic collar clamp connection (BKS) according to DIN 11864-3 form A series A, B or C

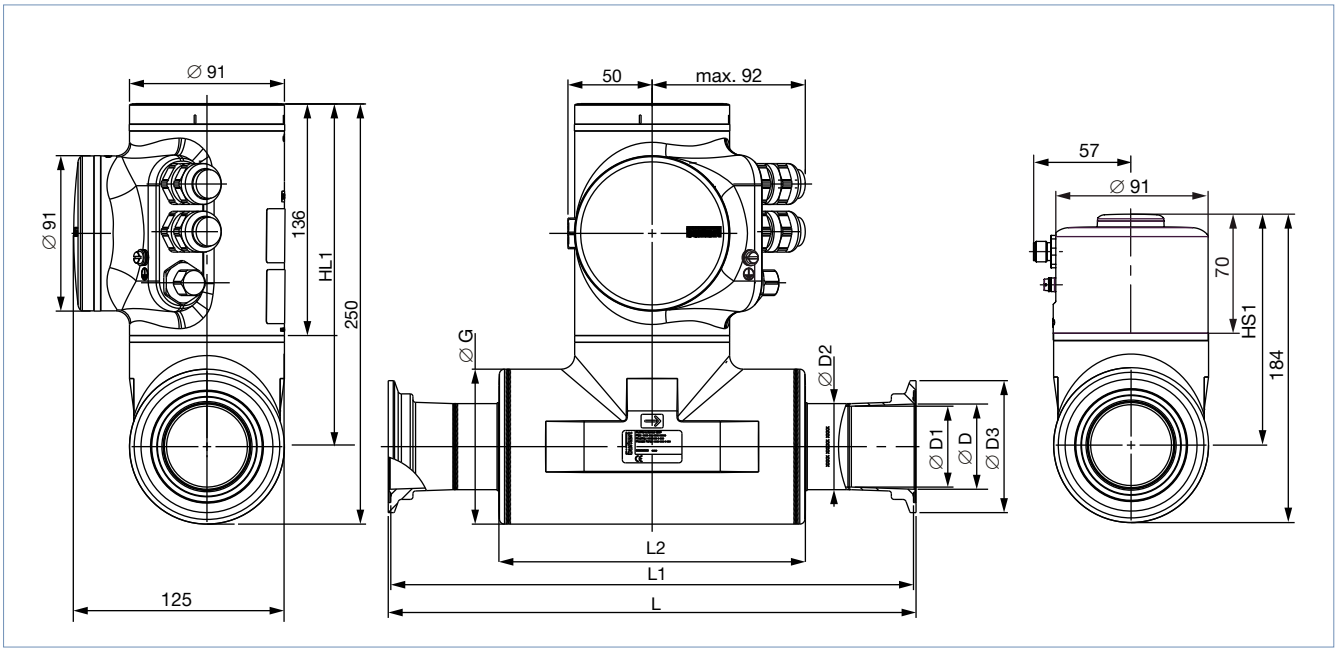

Process connection and pipe size		HL1	HS1	L	L1	L2	ØD	ØD1	ØD2	ØD3	ØG
[mm]	[inch]										
Clamp according to DIN 11864-3 series A and process pipe according to DIN 11866 series A (DIN 11850)											
15 1.)	-	220	154	166	163	105	16	15.75	19.05	34	60.3
25 1.)	-	220	154	240	237	105	26	22.1	25.4	50.5	60.3
40 1.)	-	200	134	330	327	180	38	34.8	38.1	64	91
50 1.)	-	200	134	310	307	180	50	47.5	50.8	77.5	91
Clamp according to DIN 11864-3 series B and process pipe according to DIN 11866 series B (ISO 1127)											
08	–	220	154	158	155	105	10.3	10.3	14	34	60.3
15	-	220	154	169	166	105	18.1	18.1	21.3	34	60.3
25	-	220	154	190	187	120	29.7	29.7	33.7	50.5	60.3
40	-	200	134	280	277	180	44.3	44.3	48.3	64	91
50	-	200	134	271	268	180	56.3	56.3	60.3	91	91
Clamp according to DIN 11864-3 series C and process pipe according to DIN 11866 series C (ASME BPE)											
–	½	220	154	158	155	105	9.4	9.4	14	34	60.3
–	¾	220	154	167	164	105	15.75	15.75	19.05	34	60.3
–	1	220	154	164	161	105	22.1	22.1	25.4	50.5	60.3
–	1½	200	134	278	275	180	34.8	34.8	38.1	64	91
–	2	200	134	279	276	180	47.5	47.5	50.8	77.5	91

1.) DIN 11864-3 series A based on ASME BPE measurement tube sizes with adapted concentric clamp connection, design according to EHEDG DOC8 guidelines

DTS 1000270652 EN Version: Y Status: RL (released | freigegeben | validé) printed: 12.04.2024

4.7. Flowmeter with thread connection

Note:

- Dimensions in mm, unless otherwise stated
- Thread connection according to DIN 11851 series A

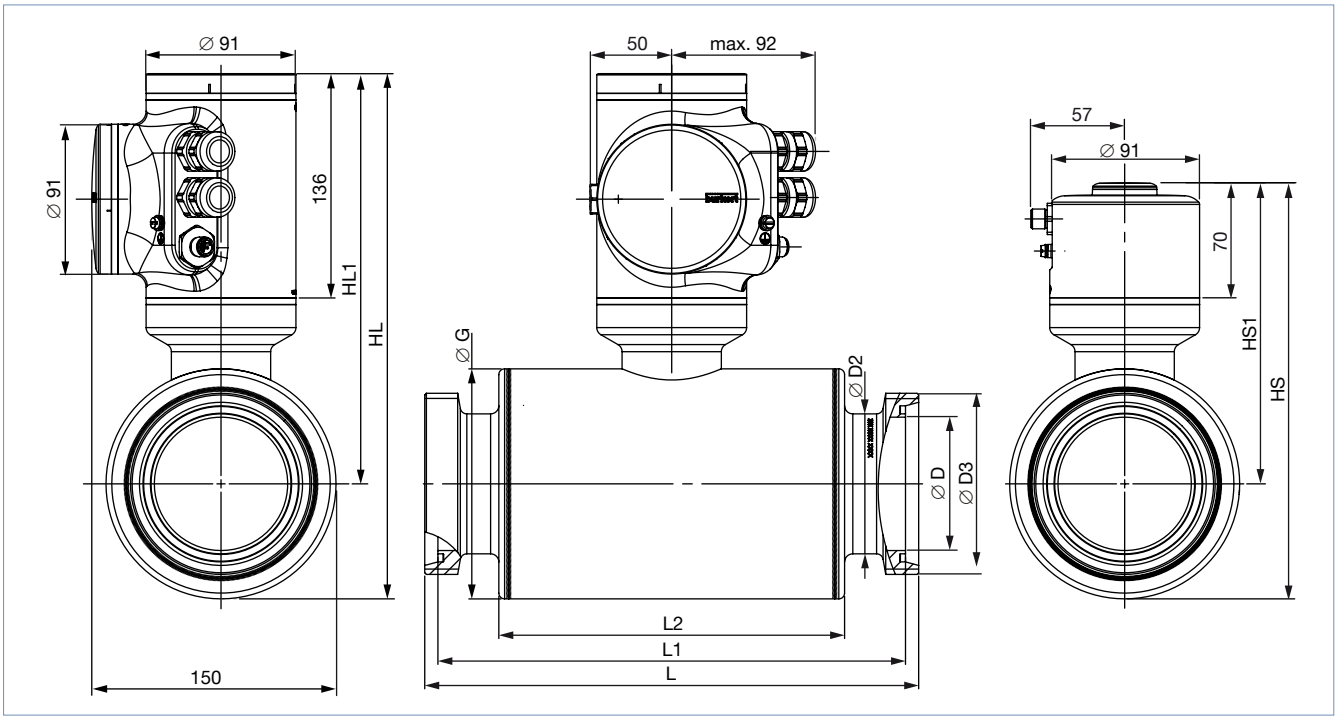

Process connection and pipe size [mm]	HL	HS	HL1	HS1	L	L1	L2	ØD	ØD2	ØD3 1.)	ØG
Thread according to DIN 11851											
65	321	255	251	185	300	284	210	66	70	Rd 95 x 1/6	139.7
80	321	255	251	185	300	284	210	81	85	Rd 110 x 1/4	139.7

1.) Thread according to DIN 405-1

5. Performance specifications

5.1. Medium temperature diagram

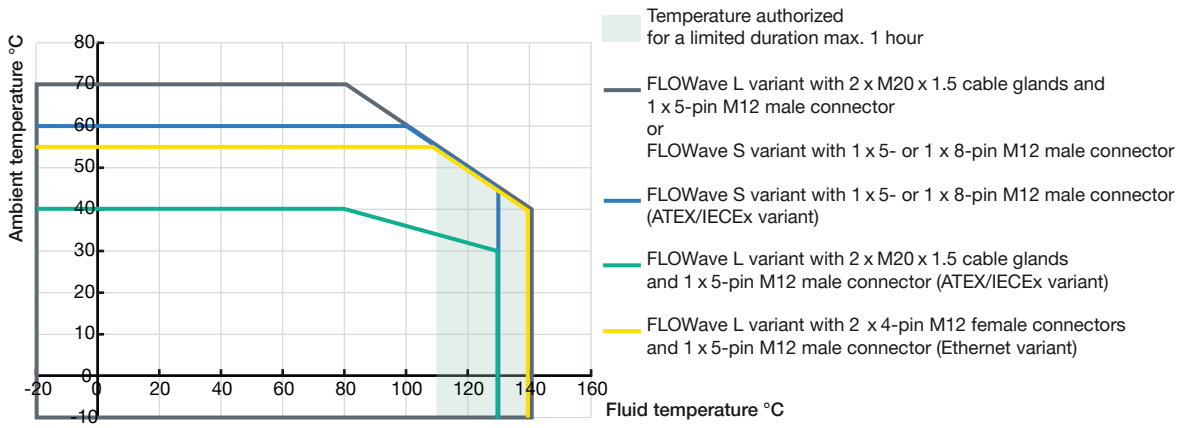

5.2. Measurement deviation table

Note:

- This table shows the measurement according to pipe diameter and process connection standards, per measuring range.
- In the following table, the term “full scale” refers to full scale of volume flow rate, i.e. the flow rate corresponding to 10 m/s flow velocity.

DN	Pipe standard	Flow velocity in sensor tube			
		in [m/s] in % of full scale	0.1 1	1 10	10 100
⅜"	ASME BPE	Volume flow rate range (m³/h)	0.017	0.17	1.7
			± 0.08 % of full scale	± 0.4 % of measured value	
½"	ASME BPE	Volume flow rate range (m³/h)	0.025	0.25	2.5
			± 0.08 % of full scale	± 0.4 % of measured value	
08	DIN 11850	Volume flow rate range (m³/h)	0.028	0.28	2.8
			± 0.08 % of full scale	± 0.4 % of measured value	
	ISO 1127	Volume flow rate range (m³/h)	0.03	0.3	3.0
			± 0.08 % of full scale	± 0.4 % of measured value	
¾"	ASME BPE	Volume flow rate range (m³/h)	0.07	0.7	7.0
			± 0.08 % of full scale	± 0.4 % of measured value	
15	DIN 11850	Volume flow rate range (m³/h)	0.073	0.73	7.3
			± 0.08 % of full scale	± 0.4 % of measured value	
	ISO 1127	Volume flow rate range (m³/h)	0.10	1.0	10
			± 0.08 % of full scale	± 0.4 % of measured value	
1"	ASME BPE	Volume flow rate range (m³/h)	0.14	1.4	14
			± 0.08 % of full scale	± 0.4 % of measured value	
25	SMS 3008	Volume flow rate range (m³/h)	0.14	1.4	14
			± 0.08 % of full scale	± 0.4 % of measured value	
	DIN 11850	Volume flow rate range (m³/h)	0.19	1.9	19
			± 0.08 % of full scale	± 0.4 % of measured value	
	ISO 1127	Volume flow rate range (m³/h)	0.25	2.5	25
			± 0.08 % of full scale	± 0.4 % of measured value	
1½"	ASME BPE	Volume flow rate range (m³/h)	0.34	3.4	34
			± 0.08 % of full scale	± 0.4 % of measured value	
40	SMS 3008	Volume flow rate range (m³/h)	0.36	3.6	36
			± 0.08 % of full scale	± 0.4 % of measured value	
	DIN 11850	Volume flow rate range (m³/h)	0.41	4.1	41
			± 0.08 % of full scale	± 0.4 % of measured value	
	ISO 1127	Volume flow rate range (m³/h)	0.56	5.6	56
			± 0.08 % of full scale	± 0.4 % of measured value	
2"	ASME BPE	Volume flow rate range (m³/h)	0.64	6.4	64
			± 0.08 % of full scale	± 0.4 % of measured value	
50	SMS 3008	Volume flow rate range (m³/h)	0.67	6.7	67
			± 0.08 % of full scale	± 0.4 % of measured value	
	DIN 11850	Volume flow rate range (m³/h)	0.71	7.1	71
			± 0.08 % of full scale	± 0.4 % of measured value	
	ISO 1127	Volume flow rate range (m³/h)	0.90	9.0	90
			± 0.08 % of full scale	± 0.4 % of measured value	
2½"	ASME BPE	Volume flow rate range (m³/h)	1.02	10.2	102
			± 0.08 % of full scale	± 0.4 % of measured value	
65	DIN 11850	Volume flow rate range (m³/h)	1.23	12.3	123
			± 0.08 % of full scale	± 0.4 % of measured value	
	ISO 1127	Volume flow rate range (m³/h)	1.47	14.7	147
			± 0.08 % of full scale	± 0.4 % of measured value	
3"	ASME BPE	Volume flow rate range (m³/h)	1.50	15.0	150
			± 0.08 % of full scale	± 0.4 % of measured value	
80	DIN 11850	Volume flow rate range (m³/h)	1.85	18.5	185
			± 0.08 % of full scale	± 0.4 % of measured value	
	ISO 1127	Volume flow rate range (m³/h)	2.00	20.0	200
			± 0.08 % of full scale	± 0.4 % of measured value	

5.3. Refresh time table

Selectable mode	Volume flow rate	Density	Mass flow rate
Very short	~25 ms	1 s	~25 ms
Short	~40 ms	1 s	~40 ms
Long	~75 ms	0.5 s	~75 ms

6. Product installation

6.1. Installation notes

Flow measurement

Note:
The device is not suitable for use in gaseous media and steam. However, their flow does not have any negative effect on the device or its operation. Other liquids flowing through again afterwards are measured correctly as before.

The factory calibration of the FLOWave is done under reference conditions with inlet (40 x DN) and outlet (1 x DN) distances and the appropriate internal diameter of the pipes.
Deviation from reference conditions can be easily adjusted through the use of a built-in K factor adjustment or Teach in procedure. We can support you if necessary, please do not hesitate to contact us.
The device can be installed into either horizontal, oblique or vertical pipes. But an installation on a vertical pipe will be better to prevent air or gas bubbles inside the measurement area. **For proper operation always ensure a totally filled measurement tube.**

Conformity to 3-A and EHEDG requires an angle of at least 5° (for SMS or series A connections) or 3° (all others available connections) against horizontal to ensure complete draining however this not necessary for proper operation of the FLOWave.

The suitable pipe size can be selected using the diagram for selecting the nominal diameter of the pipe. See chapter **"6.2. Selection of the nominal diameter" on page 28**.

6.2. Selection of the nominal diameter

The following graph is used to determine the appropriate DN of the pipe and fitting for the application, according to the fluid velocity and the flow rate. On the chart, the intersection of flow velocity and flow rate gives the appropriate diameter.

Example 1:
Flowmeter with process connection according to DIN 32676 series B (pipe ISO 1127) or DIN 11864-2 form A series B (pipe ISO 1127)

- Nominal flow: 10 m³/h
- Optimal flow rate: 1…3 m/s

Result: Select a pipe size of DN 40 or DN 50

Example 2:
Flowmeter with process connection according to DIN 32676 series A (pipe DIN 11850) or DIN 11864-2 series A (pipe DIN 11850)

- Nominal flow: 10 m³/h
- Optimal flow rate: 1…3 m/s

Result: Select a pipe size of DN 40 or DN 50

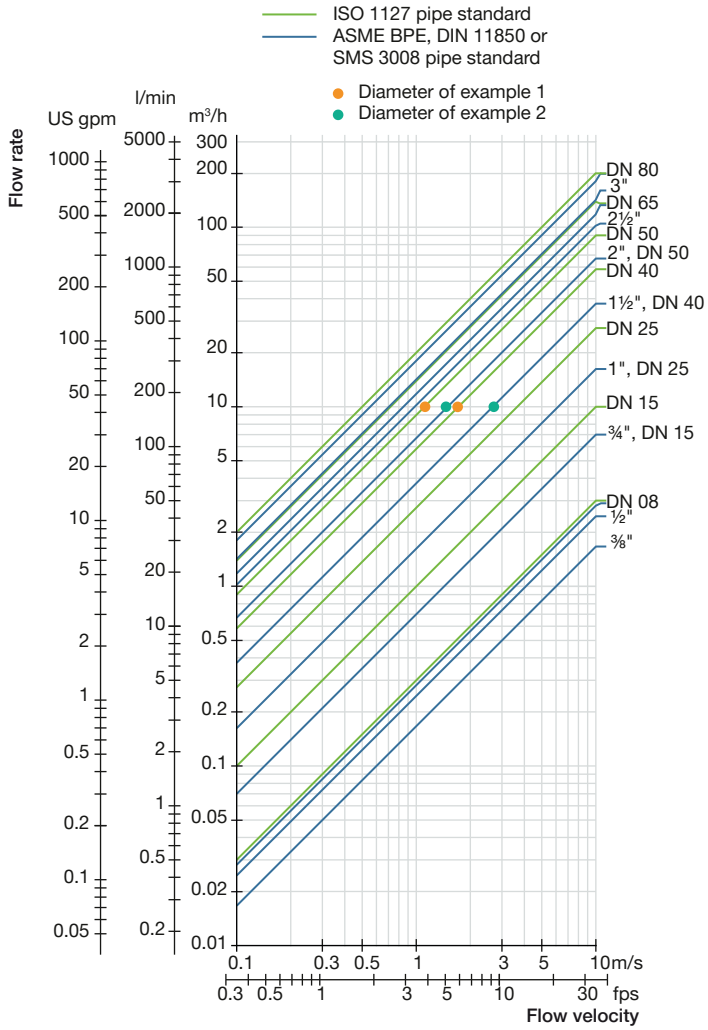

6.3. Mounting options

FLOWave L flowmeter

The product is delivered as described in position 1 in the picture below. The position of the transmitter can be changed in 90° steps. The position of the display module and the blind cover can also be changed in steps of 90°both on the top of the unit and on the front face.

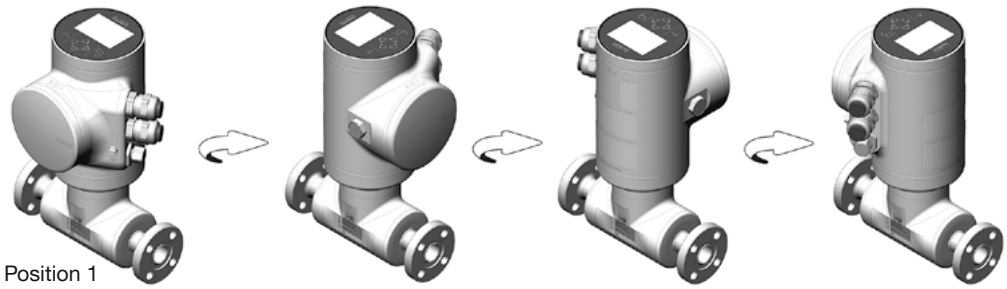

For safety reasons the display module and blind cover on the top or front are locked. The display module and blind cover can be unlocked with a magnetic key which is included in the delivery of each device.

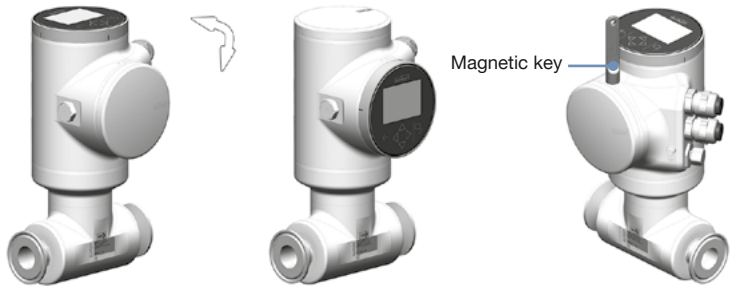

FLOWave S flowmeter

The product is delivered as described in position 1 in the picture below. The position of the transmitter can be changed in 90° steps. For safety reasons the transmitter is locked. The transmitter can be unlocked with a magnetic key which is included in the delivery of each device.

7. Product operation

7.1. Measuring principle

The technology used is based on SAW (Surface Acoustic Waves). The type of wave propagation is similar to what happens when an earthquake occurs in nature.

In the case of FLOWave it is a miniaturized signal, not running on the surface of the earth but on a measurement tube. FLOWave uses so called interdigital transducers which are placed on flattened areas of the tube surface. Each one acts as emitter as well as receiver. Two of them (nos. 1 and 4) emit forward, in the direction of the liquid flow, the others (nos. 2 and 3) backwards, i.e. in the opposite direction to the direction of flow. The propagation time is measured from emitter to receiver. The difference between the forward and backward propagation time of the waves is proportional to the volume flow rate.

The high performance measurement is achieved by the following aspects:

- Each emitter sends multiple signals that are received on two other receivers
- The results are based on the reception of the signals that pass through the liquid one or more times.
- Several measurements can be performed based on the collected information. Many properties of the liquid can be derived, including the flow velocity, the fluid density, the fraction of the transmitted signal ("acoustic transmission factor"), and the so-called "differentiation factor" (see following), as well as information about the presence of gas bubbles or solid parts.
- Mass flow is calculated from fluid density and volume flow.
- Mass flow and density measurements are an option on standard FLOWave flowmeters, which requires adjustment and calibration during manufacture. It is therefore necessary to specify whether or not the device is to be equipped with these features when ordering the device.

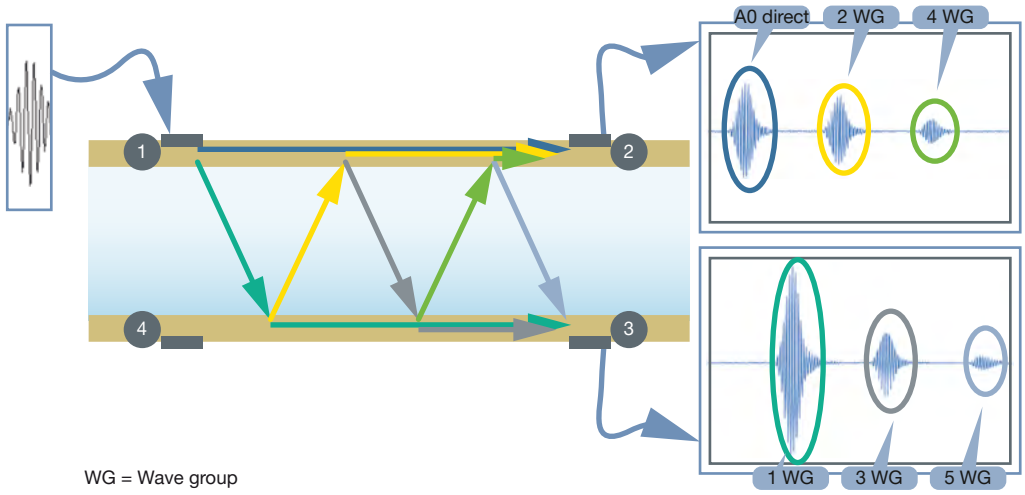

This figure shows, as an example, the reception signals when interdigital transducer 1 is transmitting.
The emitter excitation produces the SAW with a frequency of more than 1 MHz.

As a result of the emission of these waves, the following effects occur:

- A wave propagates along the surface of the tube (see blue line).
- A wave is emitted (see teal green line) and passes through the liquid towards the opposite side of the tube at a certain angle, which depends mainly on the speed of propagation on the surface of the tube and in the liquid.
- Upon reaching the opposite side of the tube, two effects take place.
  - A wave is triggered in the tube and propagates (see green line) to receiver 3
  - A wave is triggered in the liquid (see yellow line) and passes through it again to the opposite wall of the tube. The analysis of the transmitted and received waves allows deriving the process values (velocity, density, flow rates).

These effects are repeated and thus generate the many signals received, which are differentiated in the image with different colours.

7.2. Special functions

Note:
DF, ATF, density, mass flow and concentration features must be selected upon initial order of device.

For the detection of gas bubbles and solid particles the device (from firmware version 01.05.00) includes a so called “acoustic transmission factor (ATF)” with a measurement range of 5…120 %, whose value is constantly recorded and directly influenced by the presence of gas bubbles and solid particles.
A “differentiation factor (DF)”, with a measuring range of 0.8…1.3, is available for the detection and differentiation of liquids. This continuously measured value, which uses water as a reference fluid, is temperature-compensated and so its value is representative in a tight value range for each liquid. The changes in value of this process measurement enable differentiation between different liquids.

Before SW version 05.00.00, the differentiation factor was named density factor. As the density option has been added, the name has been changed to avoid confusion.

Beer wort extract concentration measurement (“°Plato”) requires the activation of DF and ATF, on which it is based.

8. Product design and assembly

8.1. Product assembly

The 8098 flowmeter consists of a S097 flow sensor and a FLOWave L transmitter (variant FLOWave L flowmeter) or FLOWave S transmitter (variant FLOWave S flowmeter).
The flow sensor includes the measurement tube equipped with interdigital transducers, the sensor housing and the process connections in accordance to the standards ISO, ASME BPE, DIN, SMS. At present the sensor size ranges from DN 08 to DN 80 or from ⅜" to 3".

The FLOWave L flowmeter is available with or without display. The high resolution display includes a capacitive working keypad for all interactive user actions, guided by a user friendly menu system. The output signals include one analogue output and one digital output; while a third output signal can be switched between analogue and digital through parametrisation. Electrical connection is done on push-in connectors via two cable glands and/or one M12 connector.

The FLOWave S flowmeter is only available without display. The electrical connection is made via an M12 male connector.

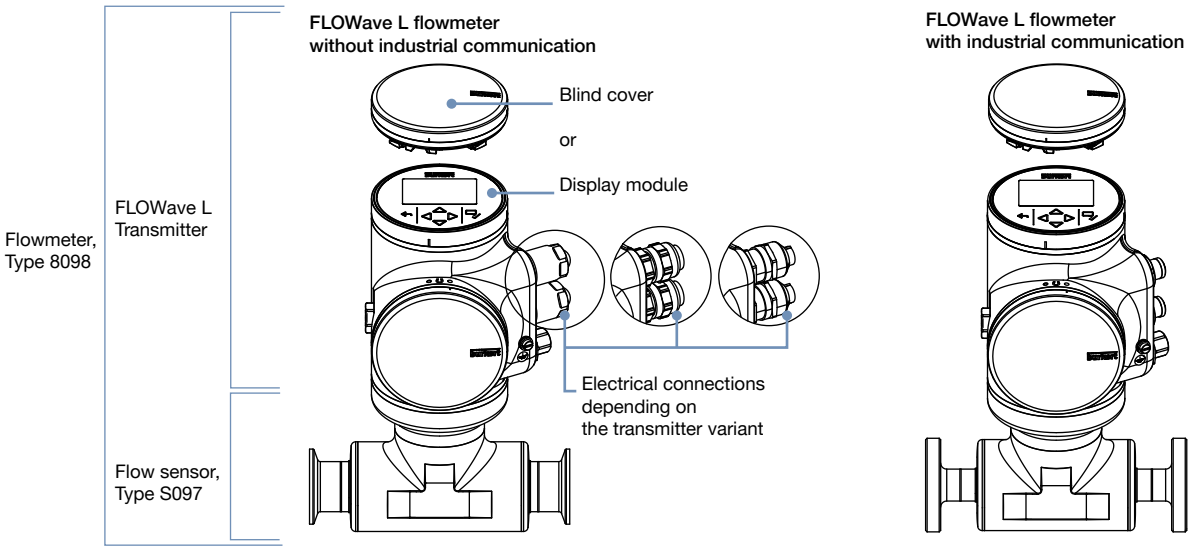

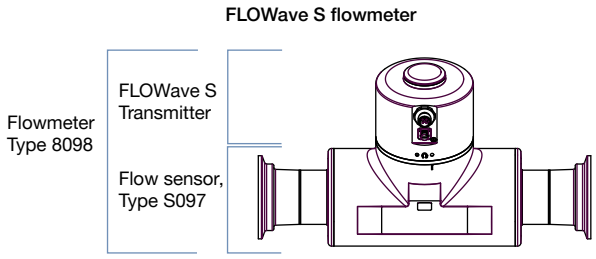

9. Product accessories

Note:
To configure a device without a display, use the USB-büS-Interface set Type 8923 and the Bürkert Communicator software Type 8920. For the FLOWave S with 2 outputs, the büS adaptor cable, article no. 773286, is also required.

See **Software manual Type 8920** ▶ for more information.

Accessories	No.	Description
USB-büS-Interface set 1 	**1**	Quick-Start
	2	Power supply: 100…240 V AC/ 24 V DC 1 A and adaptors for power supply worldwide use
	3	büS terminating resistor on büS Y-splitter
	4	5-pin M12 male connector wired on free end cable, cable length: 0.2 m
	5	büS connection cable with 5-pin M12 male connector, micro USB B plug, cable length: 0.3 m
	6	büS adaptor with 5-pin M12 male connector, A-coded to 5-pin M12 male connector, A-coded
	7	büS stick (USB to büS/CANopen adaptor)
	8	büS service cable with 5-pin M12 female connector, mini USB plug and circular female connector for power supply, cable length: 0.7 m
	9	Magnetic key
USB-büS-Interface set 2 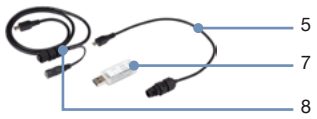	**10**	CD - Communicator (30-day license without registration, update and licensing over Bürkert home page)

10. Ordering information

10.1. Bürkert eShop

Bürkert eShop – Easy ordering and quick delivery

You want to find your desired Bürkert product or spare part quickly and order directly? Our online shop is available for you 24/7. Sign up and enjoy all the benefits.

Order online now

10.2. Recommendation regarding product selection

Note:

- The installation of the flowmeter in a pipe requires the use of counter-connection, seals, fixing elements, etc. depending on the used norm.
- The drawings show the installation with a FLOWave L variant of the flowmeter. The installation is also valid for the FLOWave S variant.

For instance with middle-sized devices:

Connection	Description
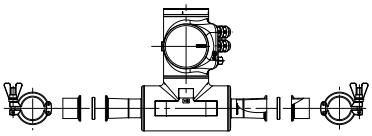	**With clamp connection according to DIN 32676 series A** To insert a FLOWave DN 40 with clamp connections according to DIN 32676 series A (with Ra <0.8 µm) to a pipe according to DIN 11866 series A (DIN 11850), the **correct adapters to be selected and separately ordered** are for instance • 2 x **BBS-25** clamp ferrules, article no. 747237, see **data sheet Type BBS-25** ▸ for more information • 2 x the appropriate seals (not provided) • 2 x the corresponding clamps, article no. 731164
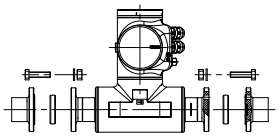	**With aseptic collar flange (BF) according to DIN 11864-2 form A** To insert a FLOWave DN 40 with collar flanges according to DIN 11864-2 series B (with Ra <0.8 µm) to a pipe according to DIN 11866 series B (ISO 1127), the **correct adapters to be selected and separately ordered** are for instance • 2 x **BBS-06** aseptic groove flange, article no. 731860, see **data sheet Type BBS-06** ▸ for more information • 2 x the appropriate seals (not provided) • 8 x the corresponding screws, flat washers and nuts (please refer to the DIN 11864-2 standard)
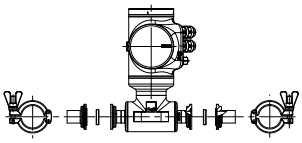	**With aseptic collar clamp (BKS) according to DIN 11864-3 form A** To insert a FLOWave 1" with hygienic collar clamps according to DIN 11864-3 series C (with Ra <0.8 µm) to a pipe according to DIN 11866 series C (ASME BPE), the **correct adapters to be selected and separately ordered** are for instance • 2 x **BBS-05** aseptic groove clamp, article no. 730272, see **data sheet Type BBS-05** ▸ for more information • 2 x the appropriate seals (not provided) • 2 x the corresponding clamps, article no. 731164
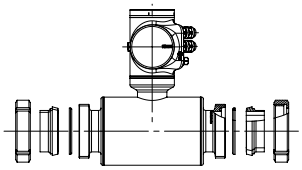	**With thread according to DIN 11851** To insert a FLOWave with thread according to DIN 11851 series A to a pipe according to DIN 11850, suitable adapters (not available from Bürkert) are required, for instance • 2 x the conical ferrule • 2 x the appropriate DIN 11851 seal • 2 x the corresponding round slotted nut

10.3. Bürkert product filter

Bürkert product filter – Get quickly to the right product

You want to select products comfortably based on your technical requirements?
Use the Bürkert product filter and find suitable articles for your application quickly and easily.

Try out our product filter

10.4. Bürkert Product Enquiry Form

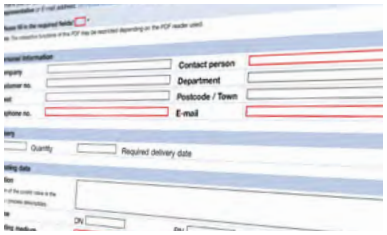

Bürkert Product Enquiry Form – Your enquiry quickly and compactly

Would you like to make a specific product enquiry based on your technical requirements? Use our Product Enquiry Form for this purpose. There you will find all the relevant information for your Bürkert contact. This will enable us to provide you with the best possible advice.

Fill out the form now

10.5. Bürkert 3D Model

Bürkert 3D Model - Interactive Animation

3D Model and Interactive Animation are available on the website of the flowmeter Type 8098.

See **website of the Type 8098** ▸ under “Applications and Tools”.

10.6. Ordering chart FLOWave L flowmeter with or without industrial communication

Clamp connection acc. to DIN 32676 series A for pipe acc. to DIN 11866 series A (DIN 11850)

Note:

- To configure a device without a display, use the USB-büS interface Type 8923 (must be ordered separately, see chapter “9. Product accessories” on page 32 and “10.8. Ordering chart accessories” on page 42).
- The following variants are equipped with a display and the special functions ATF (acoustic transmission factor) and DF (differentiation factor).

Diameter 1.)	Maximal flow rate	Dimensions 2.) D2 x s; D3	Surface quality		Approval and conformity		Article no.
			Housing, outer surface of measurement tube	Inner surface of measurement tube			
[mm]	[m³/h]	[mm]	[µm]	[µm]	3-A (28-06)	EHEDG 3.)	
Variant without industrial communication (2 cable glands 4.) M20 x 1.5 and 1 × 5-pin M12 male connector), operating voltage of 12…35 V DC							
08	2.8	14.0 x 2.0; 34.0	Ra < 1.6	Ra < 0.8	Yes	Yes	20047956
				Ra < 0.4			574317
15	7.3	19.05 x 1.65; 34.0		Ra < 0.8			569159
				Ra < 0.4			569161
25	19	25.4 x 1.65; 50.5		Ra < 0.8			569163
				Ra < 0.4			569165
40	41	38.1 x 1.65; 50.5		Ra < 0.8			569167
				Ra < 0.4			569169
50	71	50.8 x 1.65; 64.0		Ra < 0.8			569171
				Ra < 0.4			569173
65	123	70.0 x 2.0; 91.0		Ra < 0.8			573445
				Ra < 0.4			573373
80	185	85.0 x 2.0; 106.0		Ra < 0.8			573446
				Ra < 0.4			573374

1.) = process connection size and pipe size

2.) Dimensions of clamp connection: D2 = external diameter (side welded to measuring tube), s = wall thickness, D3 = external diameter (clamp connection side), see chapter “4.4. Flowmeter with clamp connection” on page 21.

3.) The EHEDG compliance is only if used in combination with gaskets from Combifit International B.V.

4.) Cable glands in nickel plated brass

DTS 1000270652 EN Version: Y Status: RL (released | freigegeben | validé) printed: 12.04.2024

Clamp connection acc. to DIN 32676 series B for pipe acc. to DIN 11866 series B (ISO 1127)

Note:

- To configure a device without a display, use the USB-büS-Interface set Type 8923 (must be ordered separately, see chapter "9. Product accessories" on page 32 and "10.8. Ordering chart accessories" on page 42).
- The following variants are equipped with a display and the special functions ATF (acoustic transmission factor) and DF (differentiation factor).

Diameter 1.)	Maximal flow rate	Dimensions 2.) D2 x s; D3	Surface quality		Approval and conformity		Article no.
			Housing, outer surface of measurement tube	Inner surface of measurement tube			
[mm]	[m³/h]	[mm]	[µm]	[µm]	3-A (28-06)	EHEDG 3.)	
Variant without industrial communication (2 cable glands 4.) M20x1.5 and 1×5-pin M12 male connector), operating voltage of 12…35 V DC							
08	3	14×1.85; 25.0	Ra<1.6	Ra<0.8	Yes	Yes	573126
				Ra<0.4			573128
15	10	21.3×1.6; 50.5		Ra<0.8		Yes	566187
		21.3×1.6; 34.0				No	566235
		21.3×1.6; 50.5		Ra<0.4		Yes	566195
		21.3×1.6; 34.0				No	566237
25	25	33.7×2.0; 50.5		Ra<0.8		Yes	566188
				Ra<0.4			566196
40	56	48.3×2.0; 64.0		Ra<0.8			566189
				Ra<0.4			566197
50	90	60.3×2.0; 77.5		Ra<0.8			566190
				Ra<0.4			566198
65	147	76.1x2.0; 91.0		Ra<0.8			573442
				Ra<0.4			573370
80	200	88.9x2.3; 106.0		Ra<0.8			573443
				Ra<0.4			573371

1.) = process connection size and pipe size

2.) Dimensions of clamp connection: D2 = external diameter (side welded to measuring tube), s = wall thickness, D3 = external diameter (clamp connection side), see chapter "4.4. Flowmeter with clamp connection" on page 21.

3.) The EHEDG compliance is only if used in combination with gaskets from Combifit International B.V.

4.) Cable glands in nickel plated brass

Clamp connection acc. to DIN 32676 series C for pipe acc. to DIN 11866 series C (ASME BPE)

Note:

- To configure a device without a display, use the USB-büS-Interface set Type 8923 (must be ordered separately, see chapter "9. Product accessories" on page 32 and "10.8. Ordering chart accessories" on page 42).
- The following variants are equipped with a display and the special functions ATF (acoustic transmission factor) and DF (differentiation factor).

Diameter[1.)]	Maximal flow rate	Dimensions[2.)] D2 x s; D3	Surface quality		Approval and conformity			Article no.
			Housing, outer surface of measurement tube	Inner surface of measurement tube				
[inch]	[m³/h]	[mm]	[µm]	[µm]	3-A (28-06)	EHEDG[3.)]	UL	
Variant without industrial communication (2 cable glands[4.)] M20x1.5 and 1 × 5-pin M12 male connector), operating voltage of 12…35 V DC								
⅜	1.7	14.00 x 3.125; 25.0	Ra < 1.6	Ra < 0.8	Yes	Yes	No	573112
				Ra < 0.4				573114
							Yes	573116
½	2.5	14.00 x 2.3; 25.0		Ra < 0.8			No	573119
				Ra < 0.4				573121
							Yes	573123
¾	7	19.05 × 1.65; 25.0		Ra < 0.8			No	566203
				Ra < 0.4				566211
							Yes	569675
1	14	25.4 × 1.65; 50.5		Ra < 0.8			No	566204
				Ra < 0.4				566212
							Yes	569676
1½	34	38.1 × 1.65; 50.5		Ra < 0.8			No	566205
				Ra < 0.4				566213
							Yes	569677
2	64	50.8 × 1.65; 64.0		Ra < 0.8			No	566206
				Ra < 0.4				566214
							Yes	569678
2½	100	63.5 x 1.65; 77.5		Ra < 0.8			No	573448
				Ra < 0.4				573376
							Yes	574710
3	150	76.2 x 1.65; 91.0		Ra < 0.8			No	573449
				Ra < 0.4				573377
							Yes	574711

Diameter 1.)	Maximal flow rate	Dimensions 2.) D2 x s; D3	Surface quality		Approval and conformity			Article no.
			Housing, outer surface of measurement tube	Inner surface of measurement tube				
[inch]	[m³/h]	[mm]	[µm]	[µm]	3-A (28-06)	EHEDG 3.)	UL	
Variant with industrial communication (Ethernet variant, 2 × 4-pin M12 female connectors and 1 × 5-pin M12 male connector), operating voltage of 12…35 V DC								
⅜	1.7	14.00 x 3.125; 25.0	Ra < 1.6	Ra < 0.4	Yes	Yes	No	573117
							Yes	573118
½	2.5	14.00 x 2.3; 25.0					No	573124
							Yes	573125
¾	7	19.05 × 1.65; 25.0					No	570444
							Yes	569679
1	14	25.4 × 1.65; 50.5					No	570445
							Yes	569680
1½	35	38.1 × 1.65; 50.5					No	570446
							Yes	569681
2	64	50.8 × 1.65; 64.0					No	570447
							Yes	569682
2½	100	63.5 x 1.65; 77.5					No	574716
							Yes	574720
3	150	76.2 x 1.65; 91.0					No	574717
							Yes	574721

1.) = process connection size and pipe size
2.) Dimensions of clamp connection: D2 = external diameter (side welded to measuring tube), s = wall thickness, D3 = external diameter (clamp connection side), see chapter "4.4. Flowmeter with clamp connection" on page 21.
3.) The EHEDG compliance is only if used in combination with gaskets from Combifit International B.V.
4.) Cable glands in nickel plated brass

Thread connection acc. to DIN 11851 series A for pipe acc. to DIN 11866 series A (DIN 11850)

Note:

- To configure a device without a display, use the USB-büS-Interface set Type 8923 (must be ordered separately, see chapter "9. Product accessories" on page 32 and "10.8. Ordering chart accessories" on page 42).
- The following variants are equipped with a display and the special functions ATF (acoustic transmission factor) and DF (differentiation factor).

Diameter 1.)	Maximal flow rate	Dimensions 2.) D2 x s; D3	Surface quality		Approval and conformity		Article no.
			Housing, outer surface of measurement tube	Inner surface of measurement tube			
[mm]	[m³/h]	[mm]	[µm]	[µm]	3-A (28-06)	EHEDG 2.)	
Variant without industrial communication (2 cable glands 4.) M20 x 1.5 and 1 × 5-pin M12 male connector), operating voltage of 12…35 V DC							
65	123	70.0 x 2.0; Rd 95 x 1/6	Ra < 1.6	Ra < 0.8	Yes	Yes	573463
80	185	85.0 x 2.0; Rd 110 x ¼		Ra < 0.8			573464

1.) = process connection size and pipe size
2.) D2 for holder; s = thickness; D3: thread connection
3.) The EHEDG compliance is s only valid if used in combination with EHEDG-compliant gaskets from
- Kieselmann GmbH, Germany (ASEPTO-STAR k-flex upgrade gaskets) or
- Siersema Komponenten Service (S.K.S.) B.V. (Netherlands SKS gasket set DIN 11851 EHEDG with EPDM or FKM inner gasket).

4.) Cable glands in nickel plated brass

Further variant on request			
	Process connection • For pipe DIN 11850: – Clamp DIN 11864-3 – Flange DIN 11864-2 • For pipe ISO 1127: – Clamp DIN 11864-3 – Flange DIN 11864-2 • For pipe ASME BPE: – Clamp DIN 11864-3 – Flange DIN 11864-2 • For pipe SMS 3008: SMS 3017		**Additional** • With/without display • Without differentiation factor (DF) • Without acoustic transmission factor (ATF) • With density and mass flow • With original gravity measurement (degree Plato) • Ethernet module (EtherNet/IP, PROFINET, Modbus TCP/IP, ETHERCAT) • ATEX/IECEx
			Material • With inner surface of measurement tube – Ra < 0.8 µm (30 µin.) – Ra < 0.4 µm (15 µin.) (electro-polished) according to ISO 4288
	Orifice • 08…80 mm • ⅜…3 inch		**Electrical connection** Cable gland in stainless steel

For any other variants, use the product enquiry form, see chapter "10.4. Bürkert Product Enquiry Form" on page 34 or check the readily available article no. listed in the Bürkert eShop.

10.7. Ordering chart FLOWave S flowmeter

Clamp connection acc. to DIN 32676 series A for pipe acc. to DIN 11866 series A (DIN 11850)

Note:
The following variants are equipped with the special functions ATF (acoustic transmission factor) and DF (differentiation factor).

Diameter 1.)	Maximal flow rate	Dimensions 2.) D2 x s; D3	Surface quality		Approval and conformity		Article no.
			Housing, outer surface of measurement tube	Inner surface of measurement tube			
[mm]	[m³/h]	[mm]	[µm]	[µm]	3-A (28-06)	EHEDG 3.)	
Electrical connection: 1 x 8-pin M12 male connector, operating voltage of 12…35 V DC							
65	123	70.0 x 2.0; 91.0	Ra < 1.6	Ra < 0.8	Yes	Yes	574689
				Ra < 0.4			573421
80	185	85.0 x 2.0; 106.0		Ra < 0.8			574690
				Ra < 0.4			573422

1.) = process connection size and pipe size
2.) Dimensions of clamp connection: D2 = external diameter (side welded to measuring tube), s = wall thickness, D3 = external diameter (clamp connection side), see chapter "4.4. Flowmeter with clamp connection" on page 21.
3.) The EHEDG compliance is only if used in combination with gaskets from Combifit International B.V.

DTS 1000270652 EN Version: Y Status: RL (released | freigegeben | validé) printed: 12.04.2024

Clamp connection acc. to DIN 32676 series B for pipe acc. to DIN 11866 series B (ISO 1127)

Note:
The following variants are equipped with the special functions ATF (acoustic transmission factor) and DF (differentiation factor).

Diameter 1.)	Maximal flow rate	Dimensions 2.) D2 x s; D3	Surface quality		Approval and conformity		Article no.
			Housing, outer surface of measurement tube	Inner surface of measurement tube			
[mm]	[m³/h]	[mm]	[µm]	[µm]	3-A (28-06)	EHEDG 3.)	
Electrical connection: 1 × 5-pin M12 male connector, operating voltage of 12…35 V DC							
08	3	14 × 1.85; 25.0	Ra < 1.6	Ra < 0.8	Yes	Yes	573716
				Ra < 0.4			573717
15	10	21.3 × 1.6; 50.5		Ra < 0.8		Yes	573093
		21.3 × 1.6; 34.0				No	573094
		21.3 × 1.6; 50.5		Ra < 0.4		Yes	573098
		21.3 × 1.6; 34.0				No	573099
25	25	33.7 × 2.0; 50.5		Ra < 0.8		Yes	573095
				Ra < 0.4			573100
40	56	48.3 × 2.0; 64.0		Ra < 0.8			573096
				Ra < 0.4			573101
50	90	60.3 × 2.0; 77.5		Ra < 0.8			573097
				Ra < 0.4			573102
Electrical connection: 1 × 8-pin M12 male connector, operating voltage of 12…35 V DC							
08	3	14 × 1.85; 25.0	Ra < 1.6	Ra < 0.8	Yes	Yes	571780
				Ra < 0.4			571781
15	10	21.3 × 1.6; 50.5		Ra < 0.8		Yes	571782
		21.3 × 1.6; 34.0				No	571783
		21.3 × 1.6; 50.5		Ra < 0.4		Yes	571784
		21.3 × 1.6; 34.0				No	571785
25	25	33.7 × 2.0; 50.5		Ra < 0.8		Yes	571786
				Ra < 0.4			571787
40	56	48.3 × 2.0; 64.0		Ra < 0.8			571788
				Ra < 0.4			571789
50	90	60.3 × 2.0; 77.5		Ra < 0.8			571790
				Ra < 0.4			571791
65	147	76.1 x 2.0; 91.0		Ra < 0.8			574686
				Ra < 0.4			573418
80	200	88.9 x 2.3; 106.0		Ra < 0.8			574687
				Ra < 0.4			573419

1.) = process connection size and pipe size
2.) Dimensions of clamp connection: D2 = external diameter (side welded to measuring tube), s = wall thickness, D3 = external diameter (clamp connection side), see chapter "4.4. Flowmeter with clamp connection" on page 21.
3.) The EHEDG compliance is only if used in combination with gaskets from Combifit International B.V.

DTS 1000270652 EN Version: Y Status: RL (released | freigegeben | validé) printed: 12.04.2024

Clamp connection acc. to DIN 32676 series C for pipe acc. to DIN 11866 series C (ASME BPE)

Note:
The following variants are equipped with the special functions ATF (acoustic transmission factor) and DF (differentiation factor).

Diameter 1.)	Maximal flow rate	Dimensions 2.) D2 x s; D3	Surface quality		Approval and conformity			Article no.
			Housing, outer surface of measurement tube	Inner surface of measurement tube				
[inch]	[m³/h]	[mm]	[µm]	[µm]	3-A (28-06)	EHEDG 3.)	UL	
Electrical connection: 1 × 5-pin M12 male connector, operating voltage of 12…35 V DC								
⅜	1.7	14.00 x 3.125; 25.0	Ra < 1.6	Ra < 0.8	Yes	Yes	No	573710
				Ra < 0.4				573711
							Yes	573712
½	2.5	14.00 x 2.3; 25.0		Ra < 0.8			No	573713
				Ra < 0.4				573714
							Yes	573715
¾	7	19.05 × 1.65; 25.0		Ra < 0.8			No	573085
				Ra < 0.4				573089
							Yes	573190
1	14	25.4 × 1.65; 50.5		Ra < 0.8			No	573086
				Ra < 0.4				573090
							Yes	573191
1½	35	38.1 × 1.65; 50.5		Ra < 0.8			No	573087
				Ra < 0.4				573091
							Yes	573192
2	64	50.8 × 1.65; 64.0		Ra < 0.8			No	573088
				Ra < 0.4				573092
							Yes	573193
Electrical connection: 1 × 8-pin M12 male connector, operating voltage of 12…35 V DC								
⅜	1.7	14.00 x 3.125; 25.0	Ra < 1.6	Ra < 0.8	Yes	Yes	No	571792
				Ra < 0.4				571793
							Yes	571794
½	2.5	14.00 x 2.3; 25.0		Ra < 0.8			No	571795
				Ra < 0.4				571796
							Yes	571797
¾	7	19.05 × 1.65; 25.0		Ra < 0.8			No	571798
				Ra < 0.4				571799
							Yes	571800
1	14	25.4 × 1.65; 50.5		Ra < 0.8			No	571801
				Ra < 0.4				571802
							Yes	571803
1½	35	38.1 × 1.65; 50.5		Ra < 0.8			No	571804
				Ra < 0.4				571805
							Yes	571806
2	64	50.8 × 1.65; 64.0		Ra < 0.8			No	571807
				Ra < 0.4				571808
							Yes	571809
2½	100	63.5 x 1.65; 77.5		Ra < 0.8			No	574692
				Ra < 0.4				573424
							Yes	574718
3	150	76.2 x 1.65; 91.0		Ra < 0.8			No	574693
				Ra < 0.4				573425
							Yes	574719

1.) = process connection size and pipe size
2.) Dimensions of clamp connection: D2 = external diameter (side welded to measuring tube), s = wall thickness, D3 = external diameter (clamp connection side), see chapter "4.4. Flowmeter with clamp connection" on page 21.
3.) The EHEDG compliance is only if used in combination with gaskets from Combifit International B.V.

Thread connection acc. to DIN 11851 series A for pipe acc. to DIN 11866 series A (DIN 11850)

Note:
The following variants are equipped with the special functions ATF (acoustic transmission factor) and DF (density factor).

Diameter 1.)	Maximal flow rate	Dimensions 2.) D2 x s; D3	Surface quality		Approval and conformity		Article no.
			Housing, outer surface of measurement tube	Inner surface of measurement tube			
[mm]	[m³/h]	[mm]	[µm]	[µm]	3-A (28-06)	EHEDG 3.)	
Electrical connection: 1 × 8-pin M12 male connector, operating voltage of 12…35 V DC							
65	123	70.0 x 2.0; Rd 95 x 1/6	Ra < 1.6	Ra < 0.8	Yes	Yes	574707
80	185	85.0 x 2.0; Rd 110 x 1/4		Ra < 0.8			574708

1.) = process connection size and pipe size
2.) D2 for holder; s = thickness; D3: thread connection
3.) The EHEDG compliance is s only valid if used in combination with EHEDG-compliant gaskets from
- Kieselmann GmbH, Germany (ASEPTO-STAR k-flex upgrade gaskets) or
- Siersema Komponenten Service (S.K.S.) B.V. (Netherlands SKS gasket set DIN 11851 EHEDG with EPDM or FKM inner gasket).

Further variants on request

Process connection
- For pipe DIN 11850:
  - Clamp DIN 32676
  - Clamp DIN 11864-3
  - Flange DIN 11864-2
- For pipe ISO 1127:
  - Clamp DIN 11864-3
  - Flange DIN 11864-2
- For pipe ASME BPE:
  - Clamp DIN 11864-3
  - Flange DIN 11864-2
- For pipe SMS 3008: SMS 3017

Orifice
- 08…80 mm
- ⅜…3 inch

Additional
- Without differentiation factor (DF)
- Without acoustic transmission factor (ATF)
- With density and mass flow
- With original gravity measurement (degree Plato)
- ATEX/IECEx

Material
- With inner surface of measurement tube
  - Ra < 0.8 µm (30 µin.)
  - Ra < 0.4 µm (15 µin.) (electro-polished) according to ISO 4288

Electrical connection
- 1 × 5-pin M12 male connector
- 1 × 8-pin M12 male connector

For any other variants, use the product enquiry form, see chapter "10.4. Bürkert Product Enquiry Form" on page 34 or check the readily available article no. listed in the Bürkert eShop.

10.8. Ordering chart accessories

Description		Article no.
Type ME31 display module		265468
Blind cover in stainless steel 304/1.4301		265467
 Magnetic key for unlocking		690309
System Connect		
Type ME43 Gateway/Interface		
Industrial Ethernet gateway (PROFINET IO, EtherNet/IP, Modbus TCP, EtherCAT®)		307390
PROFIBUS gateway (PROFIBUS DPV1)		307393
Type ME61 Display		
FieldConnect ME61 3.5" display (8.9 cm)		368544
EDIP Accessories		
USB-büS-Interface set		
 USB-büS-Interface set 1 (Type 8923) Further information can be found in chapter “9. Product accessories” on page 32.		772426
USB-büS-Interface set 2 (Type 8923) Further information can be found in chapter “9. Product accessories” on page 32.		772551
Connectors		
büS M12 female connector, 5-pin, straight, A-coded		772416
büS M12 male connector, 5-pin, straight, A-coded		772417
büS M12 female connector, 5-pin, angled, A-coded		772418
büS M12 male connector, 5-pin, angled, A-coded		772419
büS Y-distributor (M12 female connector, 5-pin to M12 male and female connectors, 5-pin)		772420
büS Y-distributor with power interrupt (M12 female connector, 5-pin to M12 male and female connectors, 5-pin)		772421
büS adaptor (M12 male connector, 5-pin, A-coded to M12 male connector, 5-pin, A-coded)		772867
büS terminating resistor 120 ohms, M12 male connector, 5-pin		772424
büS terminating resistor 120 ohms, M12 female connector, 5-pin		772425
Connectors with cable		
Adaptor cable with M12 female connector, 8-pin to M12 male connector, 5-pin	0.5 m	773286
M12 female connector, 5-pin, angled, moulded on büS cable, with open leads	0.7 m	772626
M12 female connector, 5-pin, straight, moulded on büS cable, with open leads	1 m	772409
	3 m	772410
	5 m	772411
	10 m	772412
M12 male connector, 5-pin straight and micro USB connector, moulded on büS cable	0.3 m	773254
M12 female connector, 8-pin, straight, moulded on büS cable, with open leads	2 m	919061
Extensions		
 M12 female and male connectors, 5-pin, straight, moulded on büS cable, shielded	0.1 m	772492
	0.2 m	772402
	0.5 m	772403
	1 m	772404
	3 m	772405
	5 m	772406
	10 m	772407
	20 m	772408
Power supply unit for standard rail Type 1573		
100…240 V AC / 24 V DC, 1 A (Class 2 according to NEC)		772361
100…240 V AC / 24 V DC, 2 A (Class 2 according to NEC)		772362
100…240 V AC / 24 V DC, 3.8 A (Class 2 according to NEC)		772898
100…240 V AC / 24 V DC, 10 A		772698